ENGLISH

USE AND MAINTENANCE INSTRUCTIONS MANUAL FOR DOSING PUMP

HC151+MULTI

HC200+MULTI

ENGLISH

FILTRATION - DOSING - DETERGENT & HYGIENE - POOL EQUIPMENT

CE

DECLARATION OF CONFORMITY

Company:	**AQUA S.p.A.**
Address:	**Via T. Crotti, 1 - 42018 - San Martino in Rio (RE)**

Hereby declares that the products named:

- **HC151+ MULTI**
- **HC200+ MULTI**

Responds to the principal features of the following European Directives:

- **2014/30/CE of 26/02/2014** - *Harmonization of the laws of the Member States relating to electromagnetic compatibility – EMC Directive*
- **2014/35/CE of 26/02/2014** - *Harmonization of the laws of the Member States relating to the making available on the market of electrical equipment designed for use within certain voltage limits – Low Voltage Directive*
- **2011/65/UE of 08/06/2011 with subsequent update 2015/863 of 31/03/2015** – *ROHS III Directives*
- **2012/19/UE of 04/07/2012** - *WEEE Directives for electrical and electronic waste*

This declaration is issued under the responsibility of Aqua S.p.A.

San Martino in Rio (RE)
Davide Vezzani
Certification Manager - Aqua S.p.A.

AQUA S.p.A.
Società soggetta a direzione e coordinamento di Finanza Cooperativa S.c.p.a. - Cap. Soc. € 10.052.488,00 Sottoscritto e Versato
S. Martino in Rio - 42018 - Reggio Emilia - ITALY - Sede legale: Via Crotti, 1 - Sede operativa: Via Bersella, 3 - Cod. Fisc. e P.IVA 02026440350 - Reg. Imprese di RE 02026440350
Ph. +39.0522.695805 - Fax +39.0522.646160 - www.aqua.it - email: aqua@aqua.it

ENGLISH

INDEX

1. GENERAL RULES 4

1.1 SHIPPING AND TRANSPORTING THE PUMP 4

1.2 INSTALLATION STANDARDS 4

1.3 PROPER USE OF THE PUMP 4

2. OPERATION 6

2.1 OVERALL DIMENSIONS 6

2.2 TECHNICAL FEATURES 6

2.3 HYDRAULIC FEATURES 7

2.4 PERFORMANCE GRAPHS 8

2.5 CONTENT OF THE PACKAGE (Standard version) 9

3. HC151+ MULTI / HC200+ MULTI 10

3.1 HC151+ /HC200+ MULTI PUMP CONTROLS 10

3.2 FIRST PUMP INITIALIZATION 11

3.3 HOW TO NAVIGATE THROUGH THE MENUS 12

3.4 GETTING STARTED 13

3.4.1 Priming 13

3.4.2 Pump calibration 14

3.5 PUMP SETUP 15

3.5.1 CONSTANT mode 16

3.5.2 CYCLIC mode 17

3.5.3 1:N mode 18

3.5.4 1xN (Adaptive) mode 18

3.5.5 1xT mode 19

3.5.6 PPM mode 20

3.5.7 mA mode 21

3.6 HOW TO CHOOSE THE PUMP MODEL 22

3.7 HOW TO CALCULATE THE MULTIPLICATION VALUE (1 x N) 22

3.8 HOW TO CALCULATE THE DIVISION VALUE (1 : N) 22

3.9 TIMER SETUP 23

3.10 SETTINGS 24

3.10.1 General e Security 24

3.10.2 General > Energy saving 26

3.10.3 Generals > Proximity sensor 26

3.10.4 Security > Password 27

3.10.5 Security > Level Input Polarity 28

3.10.6 Security > Low Level Delay 28

3.10.7 Security > Factory Settings restore 29

3.11 STATISTICS 30

4. DOSING PUMPS INSTALLATION RULES 31

5. ELECTRICAL CONNECTIONS 32

5.1 HC151+ MULTI / HC200+ MULTI model pump 32

6. TROUBLESHOOTING 33

6.1 PROBLEM – CAUSE – SOLUTION 33

7. CLEANING AND MAINTENANCE 33

7.1 CLEANING THE PUMP 33

7.2 PUMP MAINTENANCE 33

8. WARRANTY 34

EXPLODED VIEWS 36

1. GENERAL RULES

Carefully read the warnings listed below as they provide important information regarding the rules for installation, use and maintenance.
Please keep this manual carefully for further reference.

1.1 SHIPPING AND TRANSPORTING THE PUMP

The equipment must be transported in its original packaging, organized and built in such a way as to minimize shocks and to protect the protruding parts that can be damaged. If there is a need for transport after the equipment has already been installed (e.g. for a return for repair or replacement), reuse the original packaging or a sufficiently sturdy packaging with the equipment protected with absorbent material (eg bubble wrap). The external packaging must be such as to ensure the safety of the equipment in the event of a fall from 1 meter in height.

1.2 INSTALLATION STANDARDS

Install the dosing pump so that it is easily accessible whenever maintenance is required. Never obstruct the place where the dosing pump is located.
The servicing and maintenance of the dosing pump and all its accessories must always be carried out by qualified personnel.
AQUA SpA cannot be held responsible for damage to persons or things caused by poor installation or incorrect use of the dosing pump.
Check that the ground is fully functional and corresponds to the regulations in force. Make sure there is a high sensitivity differential switch (0.03 A). Check that the pump ratings are compatible with those of the mains supply. Never install the pump directly in parallel with inductive loads (eg motors / solenoid valves) but if necessary use an "insulation relay". Inside the pump there are two protections: a varistor and a fuse.

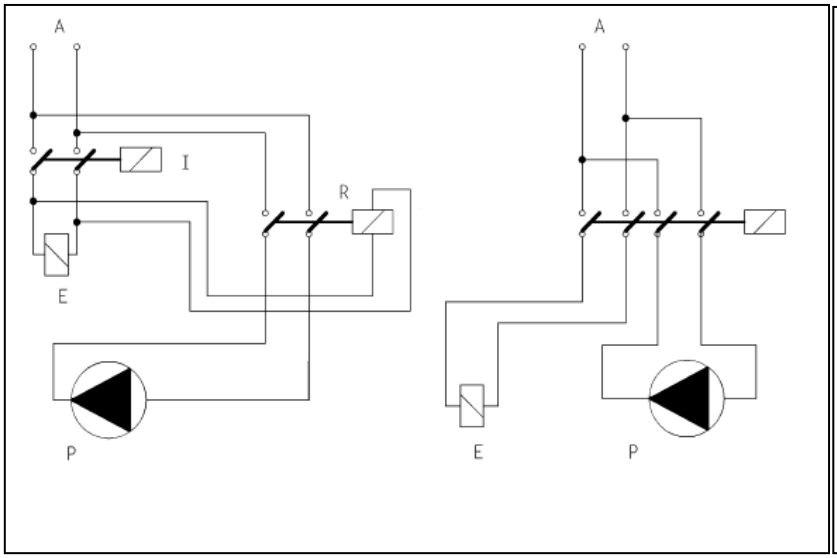

P: dosing pump

R: relay

I: Switcher or multi-pole security device

E: Motor or generally inductive charge

A: supply voltage

1.3 PROPER USE OF THE PUMP

The use of this pump must comply with the methods and instructions set out in this manual. The pump can dose chemicals that can be harmful to human health and for this reason it is essential that must be used by qualified personnel who adopt the appropriate safety methods and personal protective equipment.

AVOID IMPROPER USE of the equipment in order to avoid damage to things and people, due to uncontrolled splashes, drips, electrical contacts, etc.
The following uses can be considered improper uses, in indicative and non-exhaustive form:

- *Dosing of products not consistent with the materials with which the pump is made;*
- *Dosing of explosive and / or flammable products;*
- *Dosing of fluids with excessive viscosity (1000 cps), such as to prevent the priming of the pump itself;*

- *Dosage of food liquids, if intended to maintain such use;*
- *Avoid inverting the pump delivery and suction;*
- *Avoid powering the pump with voltages other than those indicated in the technical specifications;*
- *Avoid connecting any equipment other than specific equipment to the signal outputs (level, pulse counter, current signal, etc.);*

2. OPERATION

The HC151 + / HC200 + MULTI are digital electromagnetic dosing pumps that can operate at constant flow rate or proportional flow rate according to an external signal from a pulse emitting water meter or from a mA signal or operate via a Daily / Weekly timer. The pump has a BNC connector for the connection of a level sensor and a 4-pole connector for the connection to a signal in current (mA) or from a pulse emitting water meter.

2.1 OVERALL DIMENSIONS

HC151+

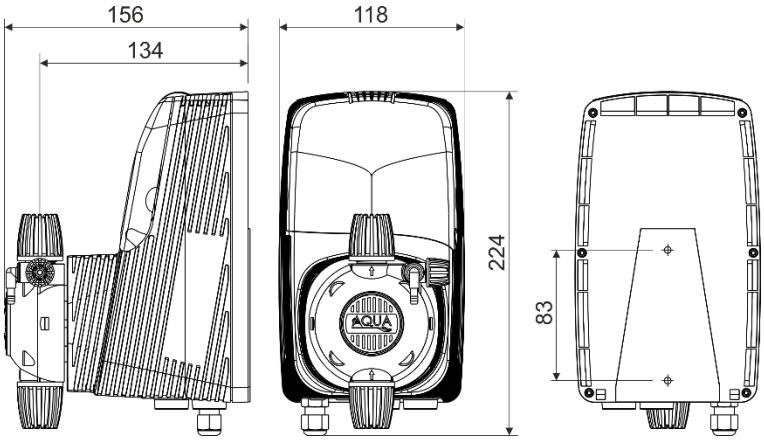

HC200+

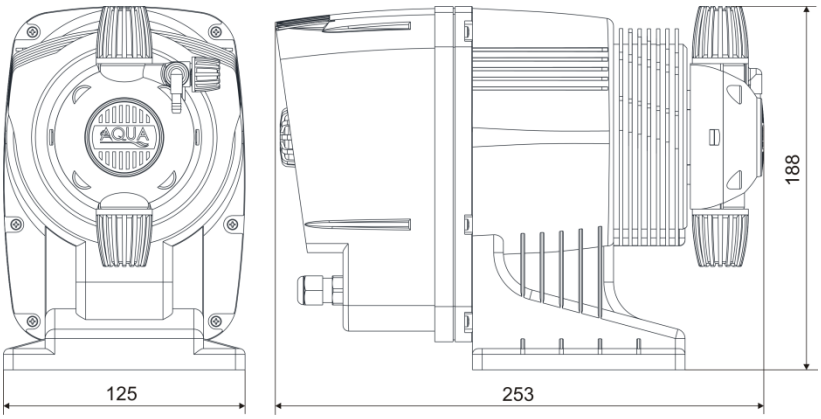

2.2 TECHNICAL FEATURES

Power supply:	*100÷240VAC ± 10% – 50/60Hz*
Insulation Class:	*CLASS I*
Absorbed power:	*see "2.3 - Hydraulic Features"*
Fusible:	*2 A – RIT*
Protection Grade:	*IP65*
Environmental conditions:	*Closed environment, altitude up to 2000m, room temperature from 5°C up to 40°C, maximum relative humidity 80% (linearly decreases until it is reduced to 50% at 40°C).*

THE EQUIPMENT, SUBJECT TO THIS DOCUMENT, ARE NOT INTENDED TO BE INSTALLED AND USED IN EXPLOSIVE ATMOSPHERE ENVIRONMENTS. IT ISN'T AN ATEX PUMP.

2.3 *HYDRAULIC FEATURES*

Hydraulic characteristics of the 230V version

SOLENOID	TYPE	FLOW RATE	PRESSURE	STROKES	INJECTION VALUE	ABSORBED POWER
		l/h	bar	spm	ml/stroke	Watt
60	A	1	7	100	0,17	13
		5	1		0,83	13
	B	3	7	150	0,33	16
		9	1		1	16
	C	5,5	6	180	0,51	22
		10	1		0,93	22
70	A	1,8	20	75	0,40	18
		4	1		0,89	18
	B	4	12	120	0,56	25
		7	1		0,97	25
	C	5,8	9	180	0,54	27
		14	1		1,30	27
80 (only HC151)	A	4	20	150	0,44	24
		10	1		1,11	24
	B	6,5	12	200	0,54	27
		13	1		1,08	27
	C	13,5	5	300	0,75	35
		20	1		1,11	35

The above data refer to tests carried out with water at room temperature.
Values can fluctuate by 10%.
Chemicals with viscosity different than water may also have significant variations on the flow rate.

Hydraulic characteristics of the 110V version

SOLENOID	TYPE	FLOW RATE	PRESSURE	STROKES	INJECTION VALUE	ABSORBED POWER
		l/h	bar	spm	ml/stroke	Watt
60	A	1,5	7	100	0,25	18
		5	1		0,83	18
	B	4,5	7	150	0,5	23
		7	1		0,78	23
	C	6	6	180	0,56	28
		8,8	1		0,81	28
70	A	1	20	75	0,22	21
		4,5	1		1	21
	B	4	12	120	0,56	31
		7	1		0,97	31
	C	6,8	9	180	0,63	41
		10,8	1		1	41
80 (only HC151)	A	3	17	150	0,33	27
		10	1		1,11	27
	B	7,5	12	200	0,63	36
		13	1		1,08	36
	C	11	5	230	0,80	44
		16	1		1,16	44

The above data refer to tests carried out with water at room temperature.
Values can fluctuate by 10%.
Chemicals with viscosity different than water may also have significant variations on the flow rate.

2.4 *PERFORMANCE GRAPHS*

2.4.1 graphs relating to the 230V versions

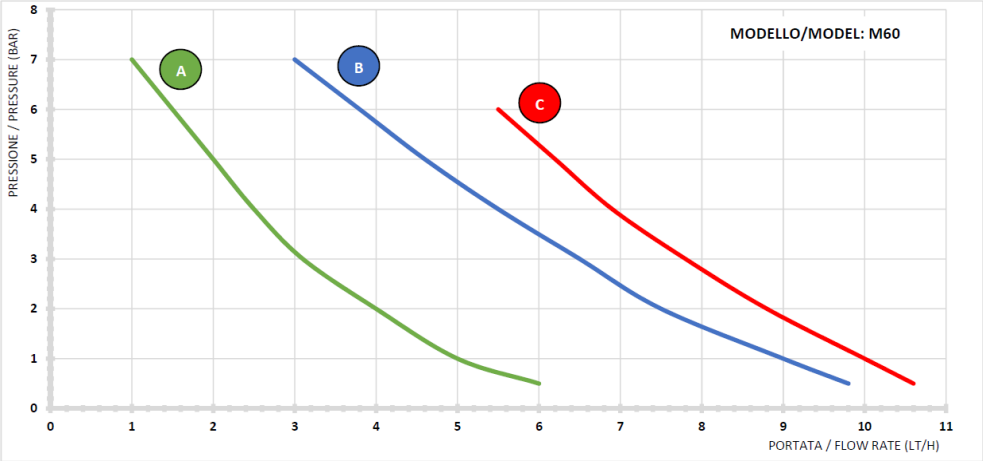

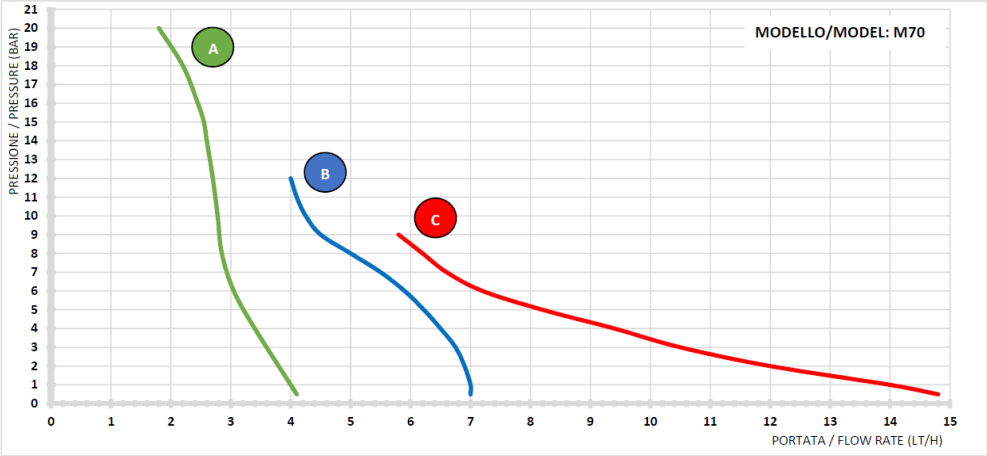

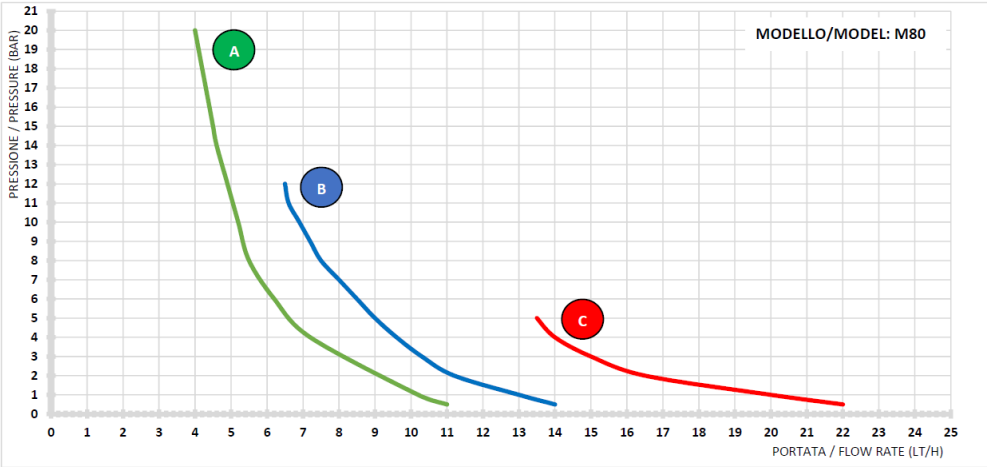

2.4.2 graphs relating to the 110V versions

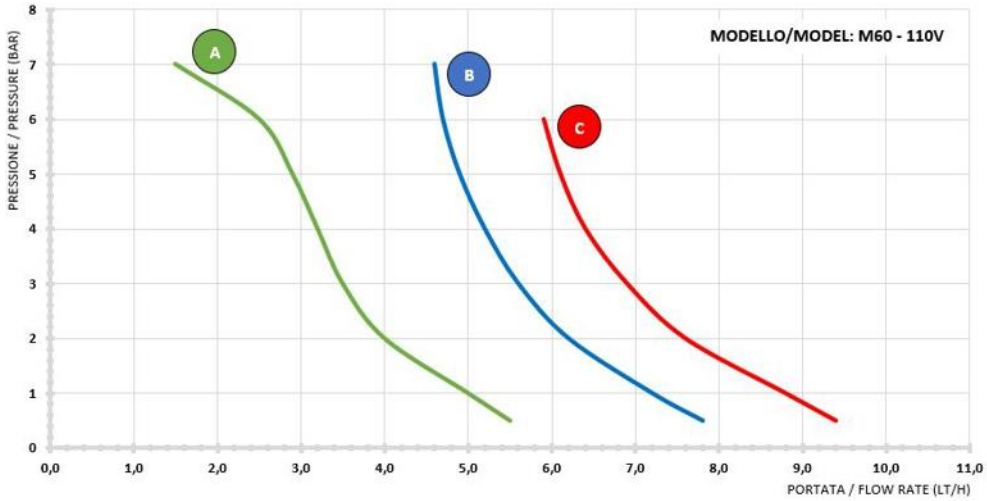

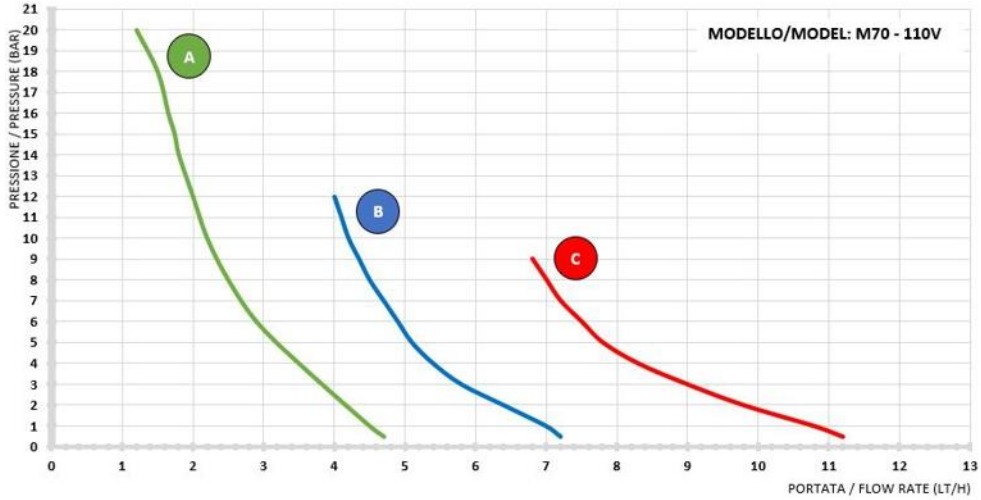

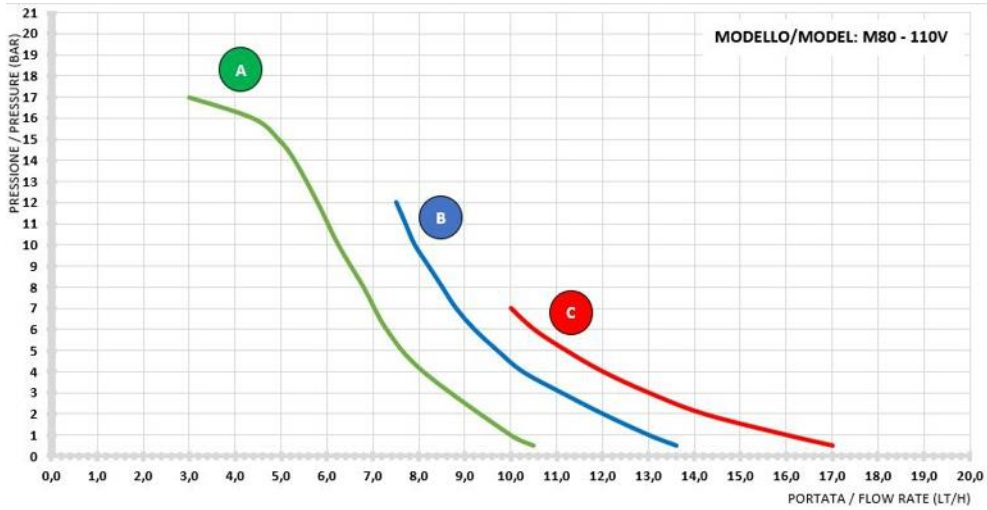

2.5 *CONTENT OF THE PACKAGE (Standard version)*

- *HC151⁺ or HC200⁺ pump*
- *Quick Start Guide*
- *Injection valve PVDF-CE-VT*
- *Foot filter PVDF-PTFE-VT*
- *2 meters PE discharge tube*
- *2 meters PVC suction tube*

- *2 meters PVC manual bleed valve tube (2 m)*
- *Fixing bracket (only for HC151⁺)*
- *Set of screws and plugs for wall mounting*

3. HC151⁺ MULTI / HC200⁺ MULTI

3.1 *HC151⁺ /HC200⁺ MULTI PUMP CONTROLS*

The control panel of the HC151+ MULTI and HC200+ MULTI dosing pumps consists of a graphic display (1) and an encoder knob (2) which allow you to navigate through the various menus and select / modify the pump configuration parameters, the figures below show what the control panel looks like:

HC151+

1. 132x56 pixel graphic display;
2. Encoder;
3. Mechanical stroke lenght adjustment (only for HC200+)

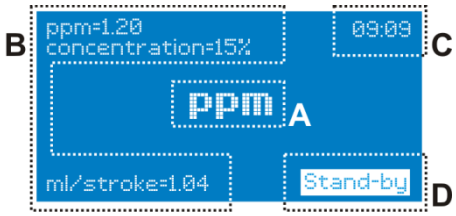

A. Active function;
B. Configured parameters;
C. Time;
D. Warnings messages

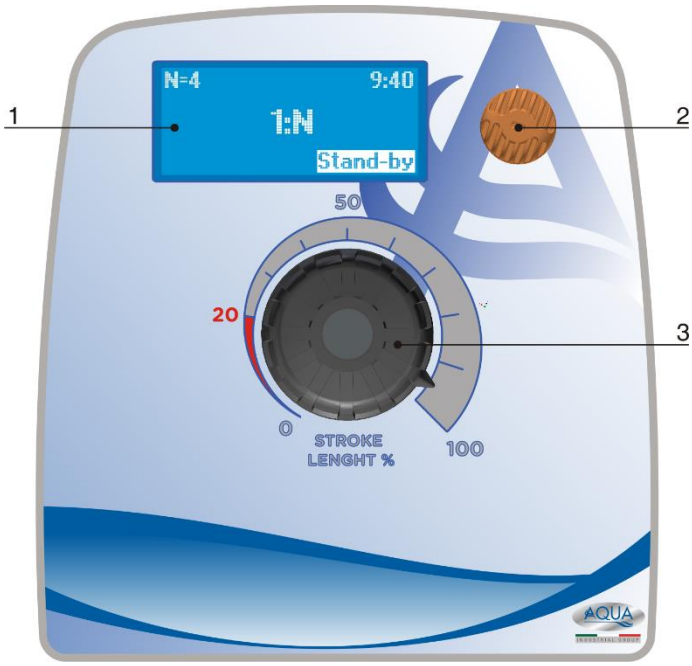

HC200+

***Press to**: confirm a value or access a submenu. <u>If it is kept pressed for 2 seconds, it returns to the previous menu or activates / deactivates the Stand-by.</u>*

***Turn to**: navigate the menus or change a numeric value.*

3.2 FIRST PUMP INITIALIZATION

The first time the pump is switched on, some basic parameters must be set, such as the language in which the programming menus will be displayed, the date and time of the system and other basic settings.
Below is a diagram of what appears when the unit is first turned on:

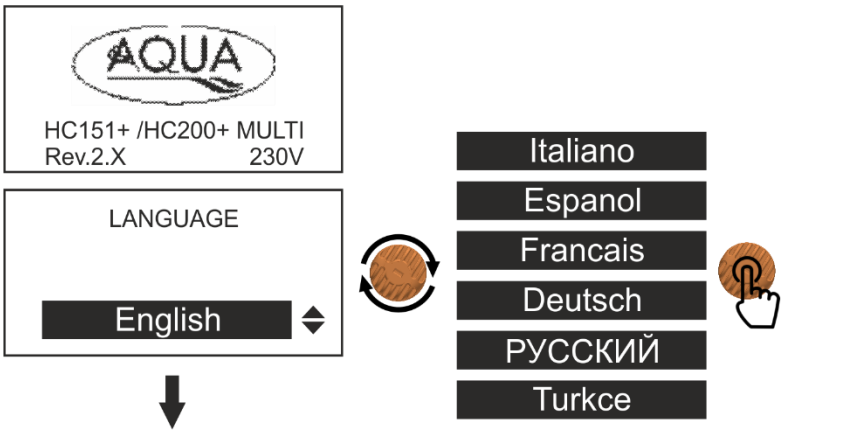

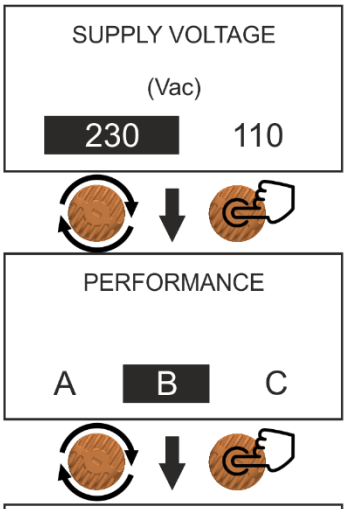

It is possible to choose between two power supply voltages: 230V or 110V, both 50/60 Hz

*Choose mode **A**, **B** or **C** performance you want according to the table on Paragraph 2.3.*

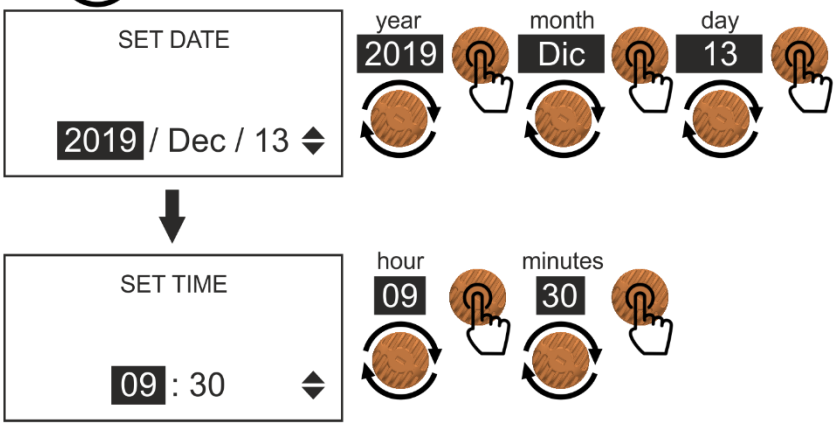

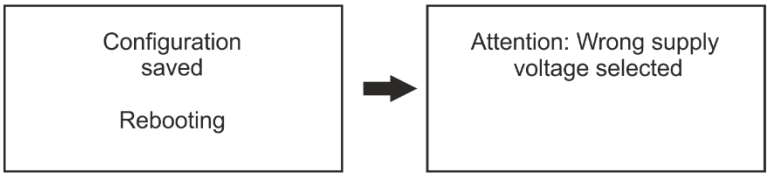

If an incorrect power supply voltage is chosen, the pump will warn with a message on the screen (as shown on the side) and you will be asked to carry out the pump initialization procedure again.

3.3 *HOW TO NAVIGATE THROUGH THE MENUS*

The pump has been designed so the programming phases are user friendly, for this purpose the control area has a large backlit graphic display and a rotary encoder with an integrated button function. A navigation diagram of the menus on the pump is shown below:

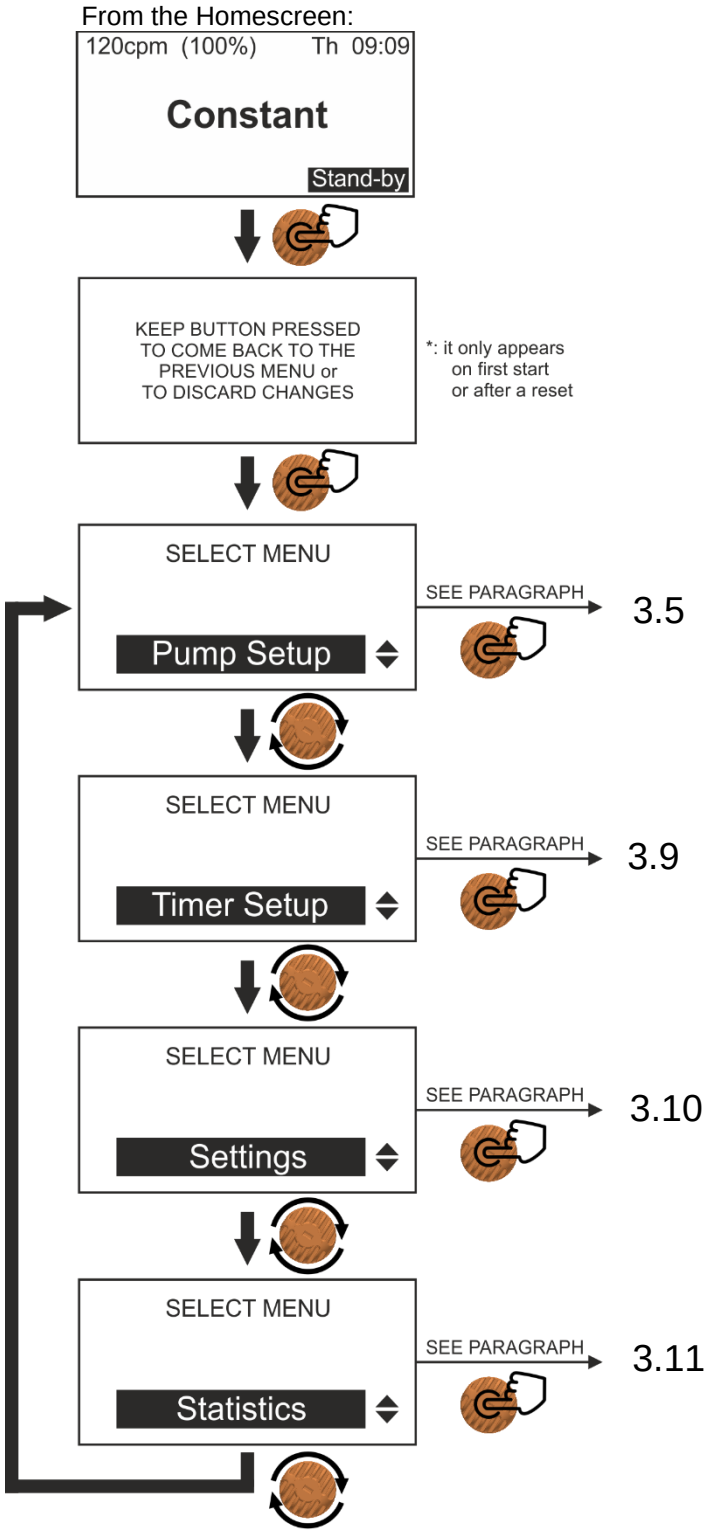

This is the menu where all the main configurations for a correct pump operation are performed.

This is the menu where all pump functions are managed by a daily/weekly timer.

This is the menu in which basic operations are performed, such as choosing the language or setting the system time.

This is the menu where information on pump operation, such as stroke count or metered volume can be viewed.

3.4 *GETTING STARTED*

3.4.1 Priming

Once the basic parameters of the pump have been set, it is suggested to carry out the priming: this operation is used to "prime" the metering pump (i.e. fill the chamber between the membrane and the pump body and remove any air bubbles present inside the suction and discharge tubes) and make it ready to dose the chemical in the plant.
Before proceeding with priming, make sure you have connected the delivery and suction tubes to the pump body as well as the air purge tube included in the supply (for the connection, follow the image shown below:

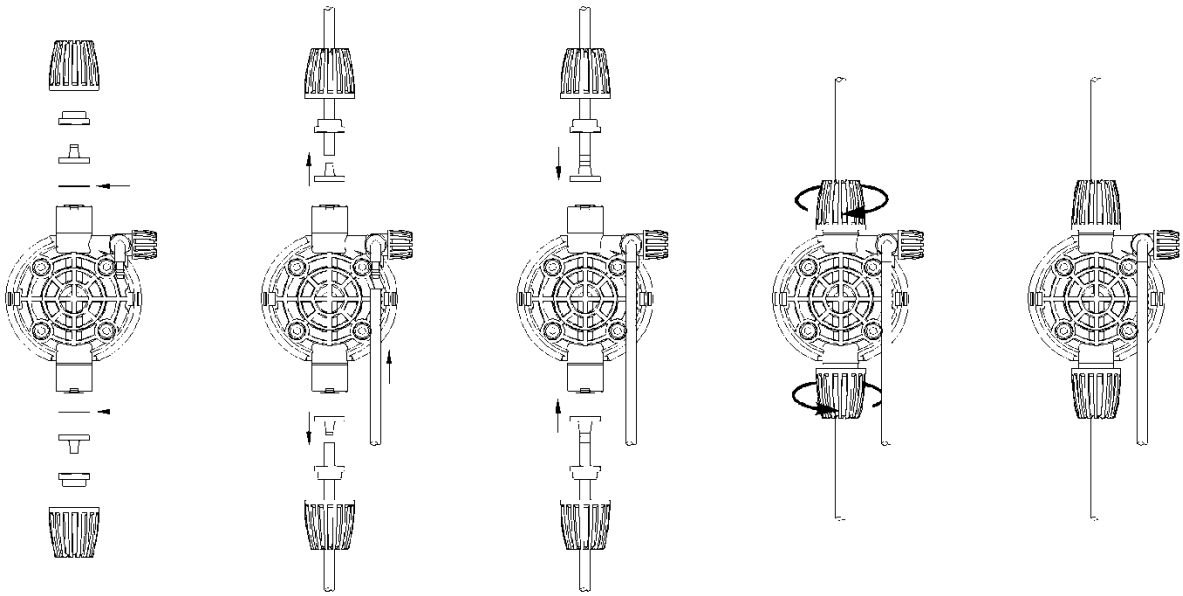

For priming, follow the steps below:

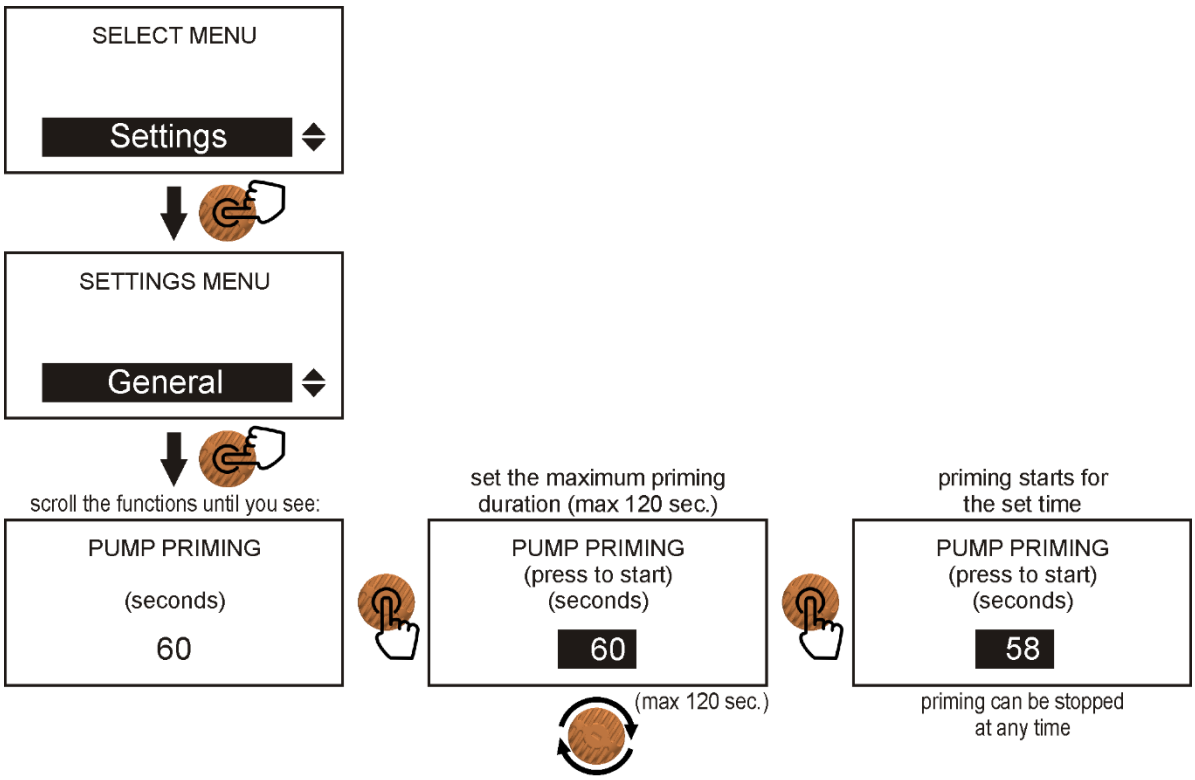

3.4.2 Pump calibration

Once the priming procedure is complete, the quantity of ml (milliliters) per stroke that the pump is able to supply must be defined, this information is necessary for a correct dosage of the chemical and essential if you want to use the PPM function described in the "PUMP SETUP" paragraph.
ATTENTION: in order to use this function, the pump MUST be primed.

To calibrate the pump, follow the steps below:

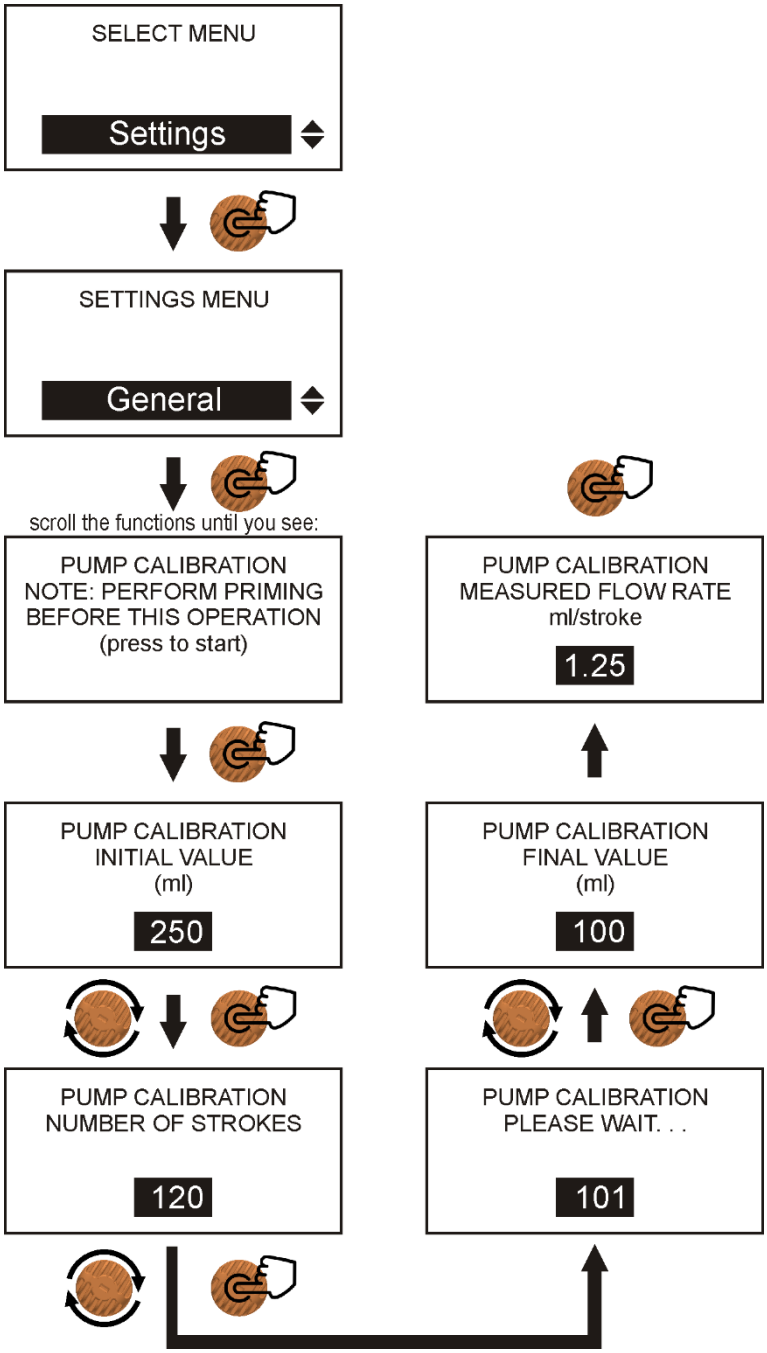

1. Make sure that the pump has been installed on the plant and it has been primed using the function described in the previous paragraph (§ 3.4.1)

2. Connect the suction tube (complete with foot filter) into a BEKER-type test tube graduated in ml (milliliters);

3. Fill the test tube until reaching the maximum limit with the chemical product that will be used during the normal operation of the pump;

*4. Power up the pump, enter the **SETTINGS > GENERAL MENU**, follow the instructions on the display: enter the maximum value of the beker by turning the encoder knob, then press the knob to confirm;*

5. Set the number of strokes the pump will perform;

6. Once the button has been pressed to confirm, the pump will start for the number of strokes set;

7. At the end, check how much chemical is left in the beker and write down this value on the display using the knob, finally press to confirm this value;

8. the next screen will show the value calculated by the pump in ml per stroke.

9. To exit the calibration function, keep the button pressed for 2 seconds.

3.5 *PUMP SETUP*

Within this menu, you can choose the operating mode that you want to use.
The complete list of available functions is shown below:

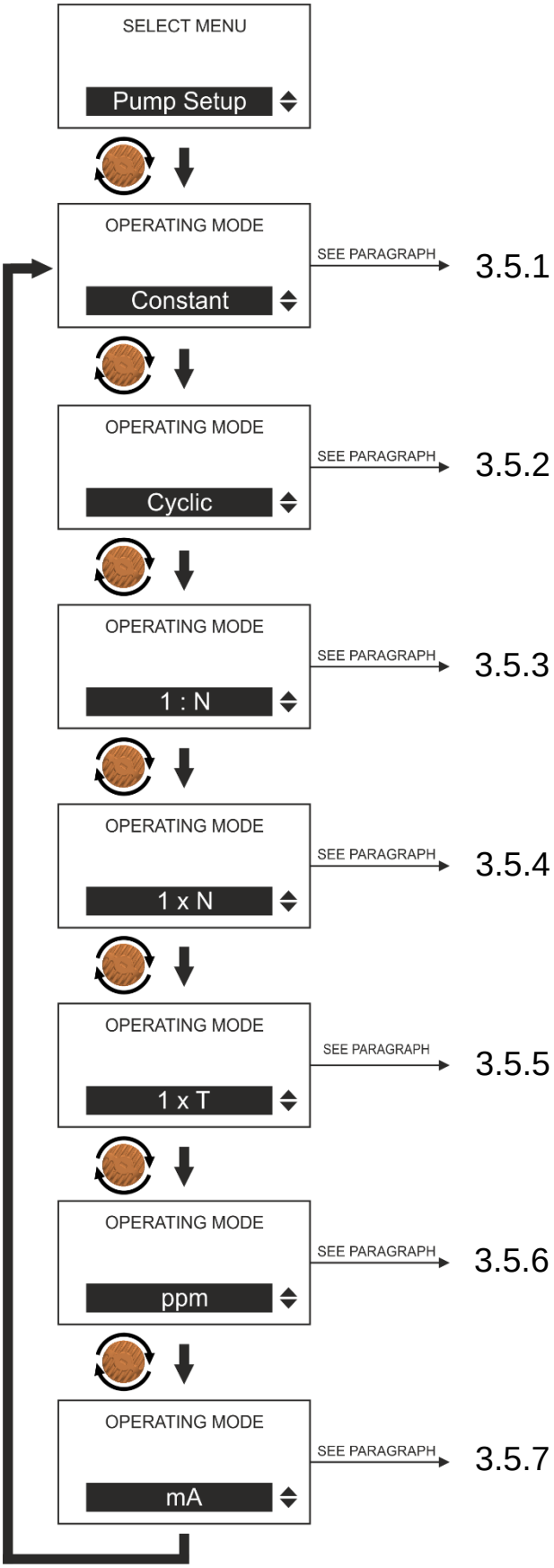

This mode allows the pump to work with a constant frequency in relation to the strokes / minute or strokes / hour set.

This mode allows the pump to operate through user-set ON and OFF cycles.

This mode allows you to connect the pump to a pulse emitting water meter. The pulses coming from the water meter are divided by the set value.

This mode allows you to connect the pump to a pulse emitting water meter. The pulses coming from the water meter are multiplied by the set value.

This mode allows the pump to receive an external signal and dose for a time set by the user.

This mode allows you to connect the pump to a pulse emitting water meter. The pulses coming from the water meter determine the dosage according to the ppm, the chemical concentration and the set ml / stroke.

This mode allows you to connect the pump to an external mA signal. The current supplied to the pump (via the input signal) determines the proportional dosage according to the two values.

3.5.1 CONSTANT mode

This mode allows the pump to dose at a constant frequency that can be set by the user; this function allows the pump to work without the need to connect it to an external signal. You can decide to set the frequency in strokes / minute or in strokes / hour.
Here are the steps to set up this feature:

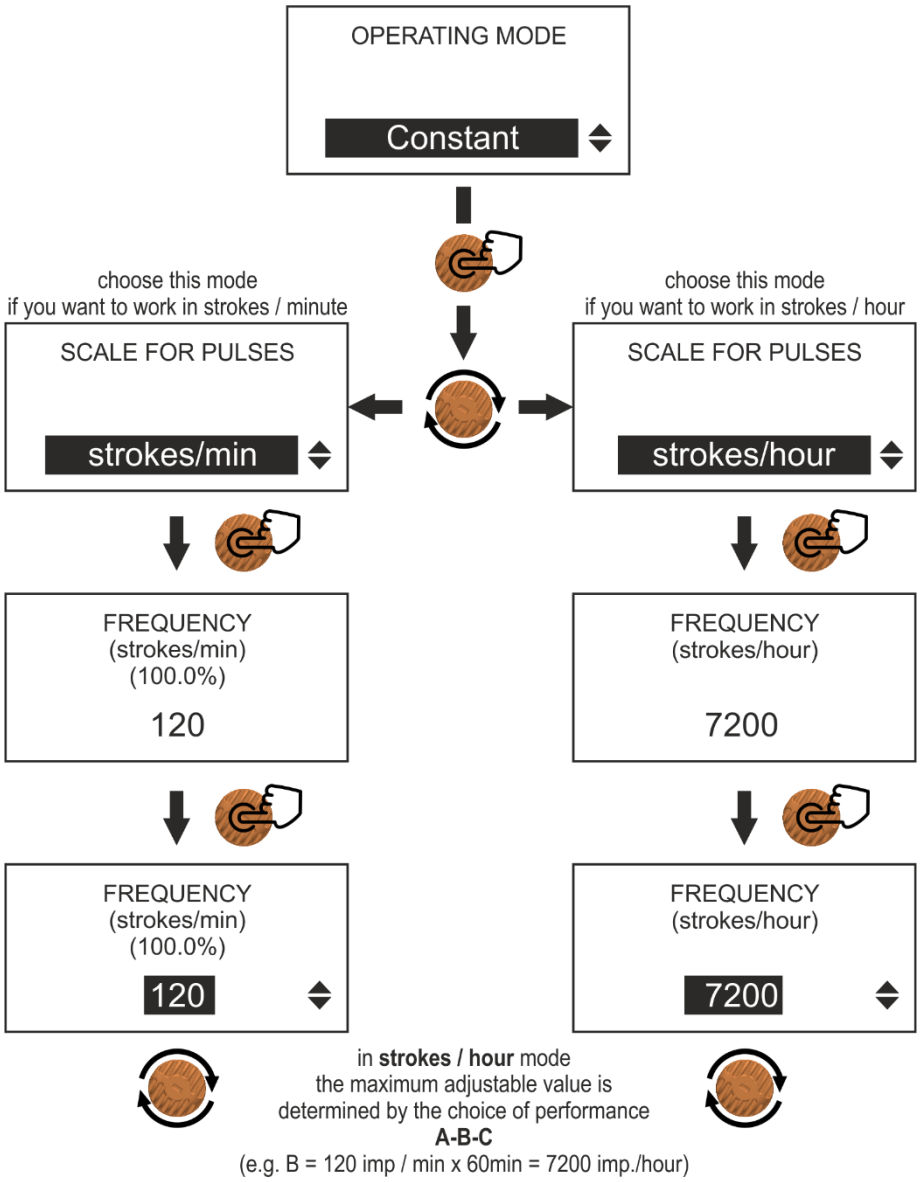

*In **strokes / min** mode*
The maximum adjustable value is
determined by the choice of performance
A-B-C
*(e.g. **B** = 120 strokes/min)*
In addition to being expressed in
strokes/minute, the frequency
is also shown in %
*(e.g.: **B** = 120 strokes/minute = 100%)*

3.5.2 CYCLIC mode

This mode allows you to determine the cyclical operation of the dosing pump, you can set the maximum working frequency of the pump (strokes/minute) and an ON and OFF cycle in minutes:seconds (mm:ss)" or in "hours: minutes (hh:mm)".
Here are the steps to set up this feature:

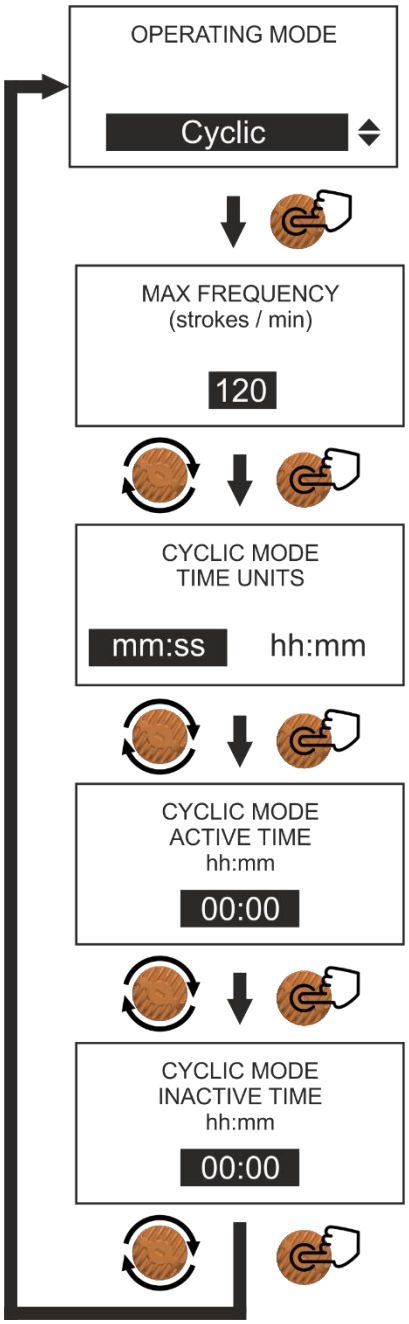

3.5.3 1:N mode

*This mode allows the user to connect the pump to a pulse emitting water meter. The pulses coming from the water meter are divided by the set value. This mode is used when it is mounted a water meter which delivers many pulses to the pump and it is necessary to divide them to have a correct dosage. The maximum number of pulses that can be set is **2500**.*
Here are the steps to set up this feature:

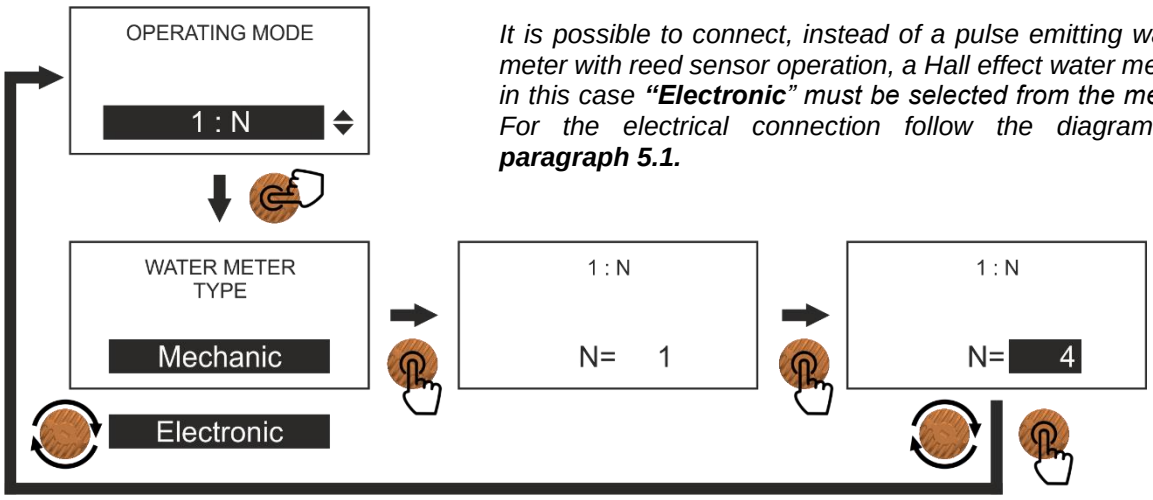

*It is possible to connect, instead of a pulse emitting water meter with reed sensor operation, a Hall effect water meter, in this case **"Electronic"** must be selected from the menu. For the electrical connection follow the diagram in **paragraph 5.1.***

3.5.4 1xN (Adaptive) mode

*This mode allows the user to connect the pump to a pulse emitting water meter. The pulses coming from the water meter are multiplied by the set value, the pump automatically sets the dosage frequency, adapting it to the time that elapses between two following signals. This mode is used when it is mounted a water meter which sends a few pulses to the pump and therefore there is the need to multiply them to have a correct dosage. The maximum number of pulses that can be set is **1000**.*
Here are the steps to set up this feature:

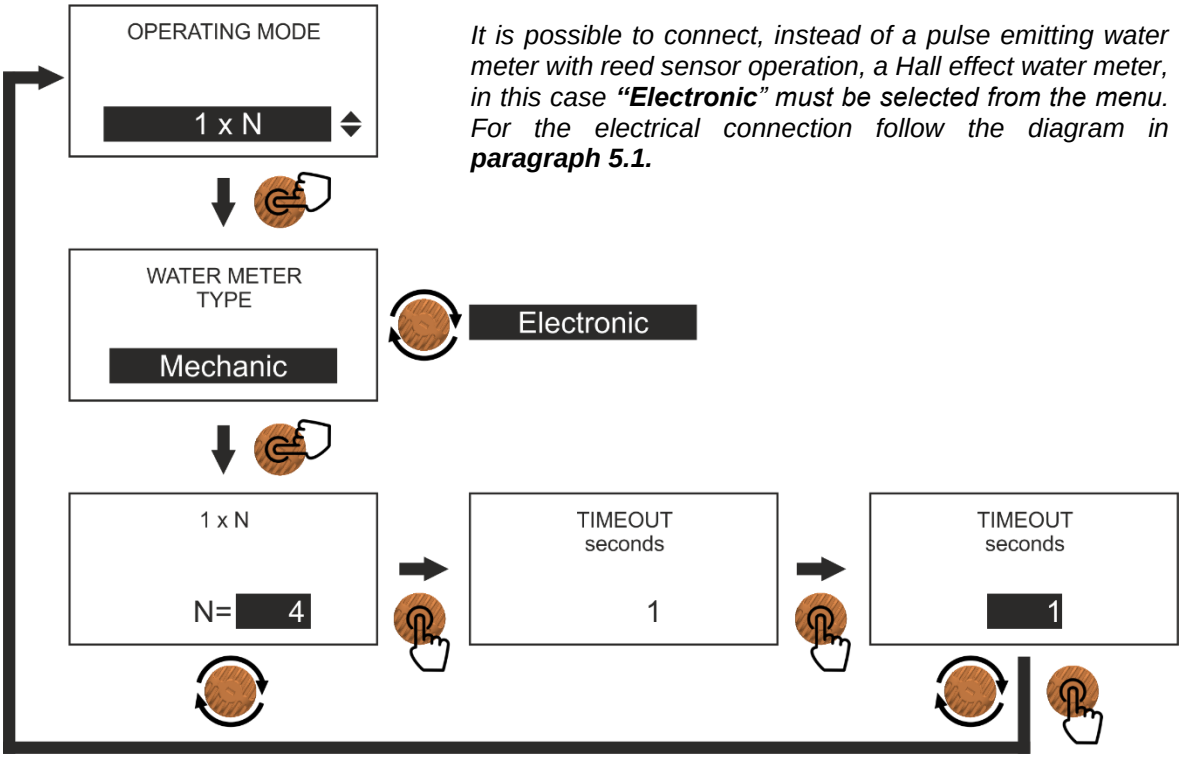

*It is possible to connect, instead of a pulse emitting water meter with reed sensor operation, a Hall effect water meter, in this case **"Electronic"** must be selected from the menu. For the electrical connection follow the diagram in **paragraph 5.1.***

How TIMEOUT works: *When the pump receives a pulse from the water meter, it starts dosing the chemical by distributing it over the time available between the last impulse and the previous one. Initially the pump does not know how long it will take before the first pulse arrives.*
To dose correctly also in this phase, the user can set a ***timeout*** *time corresponding to the expected time of water to pass, necessary to make the first pulse to arrive.*
From the first impulse forward the pump is self-adapting.

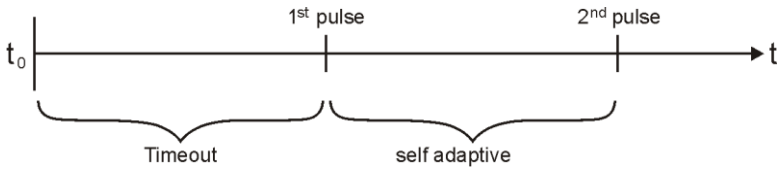

3.5.5 1xT mode

This mode allows the pump to receive an external signal (e.g. pulse water meter). When the pump receives a pulse, it will start dosing at the set frequency and time. The frequency cannot exceed the maximum value allowed by the previously set performance (A, B or C). The dosing time can be set between a minimum value of 1 minute and a maximum value of 23 hours and 59 minutes. If a second pulse arrives during the dosing time, the pump will restart the timer from the beginning. *Warning: the pulses arriving during the dosage are not stored and therefore the remaining time is not added to that of a second pulse.*
Here are the steps to set up this feature:

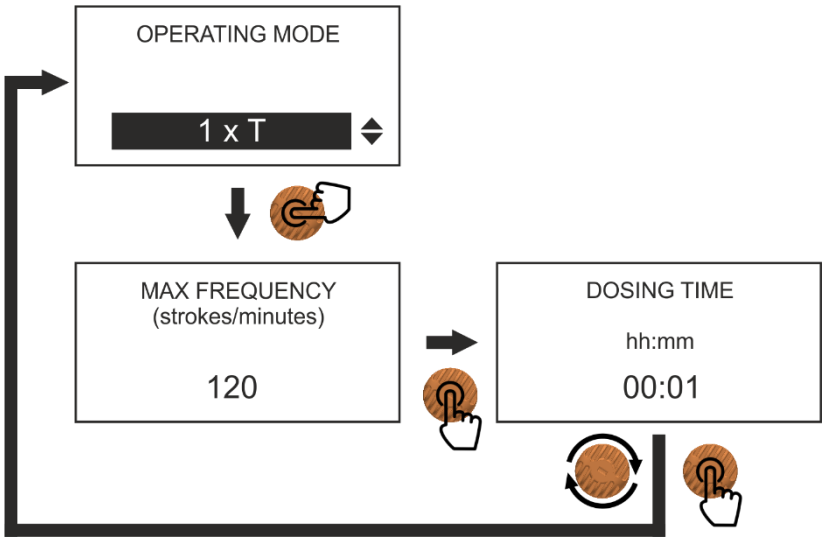

3.5.6 PPM mode

This mode allows the user to connect the pump to a pulse emitting water meter. The pulses coming from the water meter determine the dosage according to the ppm in the plant, the chemical concentration and the set ml / stroke. This mode is used when it is mounted a water meter and there is the need to accurately dose the chemical product in the set quantities by specifying only the PPM and leaving the pump to manage the incoming pulses. Here are the steps to set up this feature:

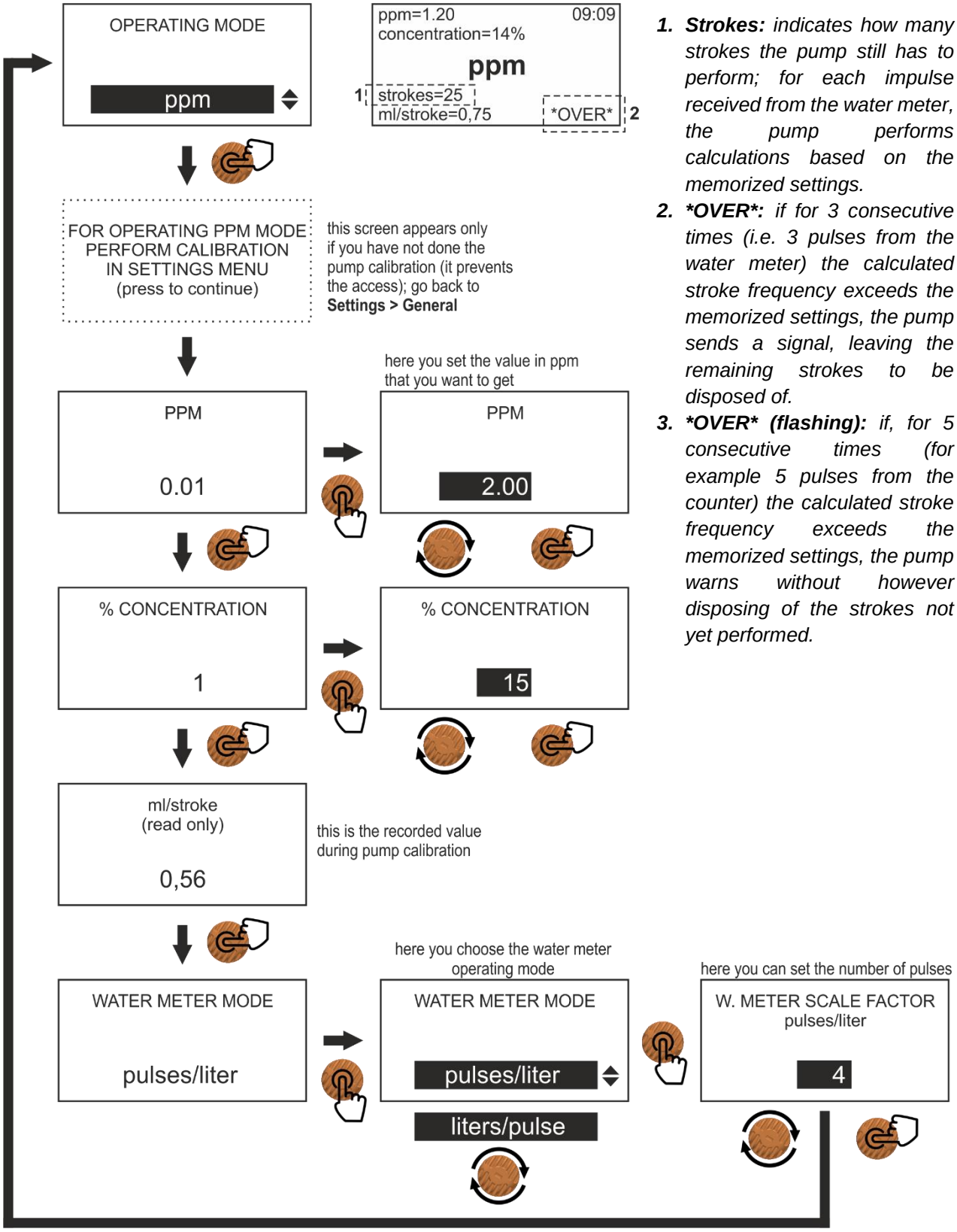

1. ***Strokes:*** *indicates how many strokes the pump still has to perform; for each impulse received from the water meter, the pump performs calculations based on the memorized settings.*
2. ****OVER*:*** *if for 3 consecutive times (i.e. 3 pulses from the water meter) the calculated stroke frequency exceeds the memorized settings, the pump sends a signal, leaving the remaining strokes to be disposed of.*
3. ****OVER* (flashing):*** *if, for 5 consecutive times (for example 5 pulses from the counter) the calculated stroke frequency exceeds the memorized settings, the pump warns without however disposing of the strokes not yet performed.*

3.5.7 *mA mode*

This mode allows the user to connect the pump to an external mA signal. The current supplied to the pump (via the input signal) determines the dosage proportional to the minimum (4mA) and maximum values set. This mode is used when an external signal is available and there is a need to accurately dose the chemical product according to an input current signal. The adjustable values cannot be lower than 4 mA or higher than 20 mA.
Here are the steps to set up this feature:

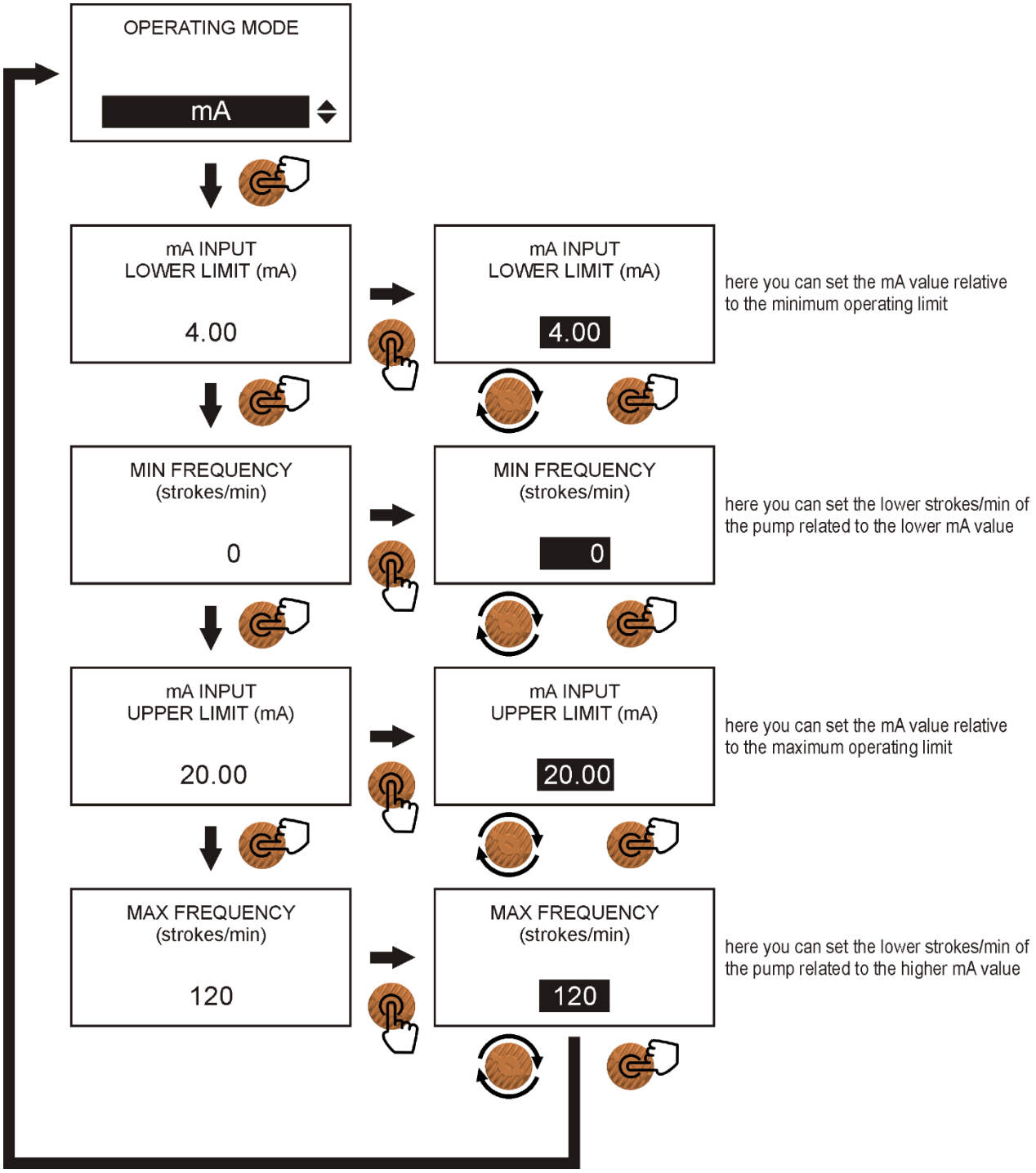

3.6 *HOW TO CHOOSE THE PUMP MODEL*

As the number of m³ of water to be treated in the system is known, and the quantity of product to be dosed, expressed in P.P.M. (parts per million) it is possible to define the minimum hourly capacity of the dosing pump required, using the following formula:

$$l/h = \frac{ppm \times K \times m^3}{1000}$$

Where:

- *ppm = quantity of product to dose (gr/m³)*
- *K = concentration of the chemical product to dose (pure product K=1). (Example: Sodium hypochlorite at 12%; K = 100:12 = 8.3)*
- *m3 = maximum flow of the water to be treated expressed in m³*

3.7 *HOW TO CALCULATE THE MULTIPLICATION VALUE (1 x N)*

$$N = \frac{ppm \times K}{imp/l \times cc \times 1000}$$

Where:

- *ppm = quantity of product to dose (gr/m³)*
- *K = concentration of the chemical product to dose (pure product K=1). (Example: Sodium hypochlorite at 12%; K = 100:12 = 8.3)*
- *Imp/l = pulses per litre provided by the water meter*
- *cc = quantity of product dosed per single injection (expressed in cc) of the pump*

3.8 *HOW TO CALCULATE THE DIVISION VALUE (1 : N)*

$$N = \frac{imp/l \times cc}{ppm \times K} \times 1000$$

Where:

- *ppm = quantity of product to dose (gr/m³)*
- *K = concentration of the chemical product to dose (pure product K=1). (Example: Sodium hypochlorite at 12%; K = 100:12 = 8.3)*
- *Imp/l = pulses per litre provided by the water meter*
- *cc = quantity of product dosed per single injection (expressed in cc) of the pump*

If in the calculation the "N" parameter is:

- *N<1 (N less than 1) it is necessary to install a counter with a number higher than the number of pulses per liter or a pump with a greater capacity per injection.*
- *N>1000 (N greater than 1000) it is necessary to install a pump with a lower capacity per injection.*

3.9 *TIMER SETUP*

This menu allows you to operate the dosing pump in order to make it work within a time programmed by the user, each pump function is subject to the activation/deactivation of the timer (if enabled).
Here are the steps to set up this feature:

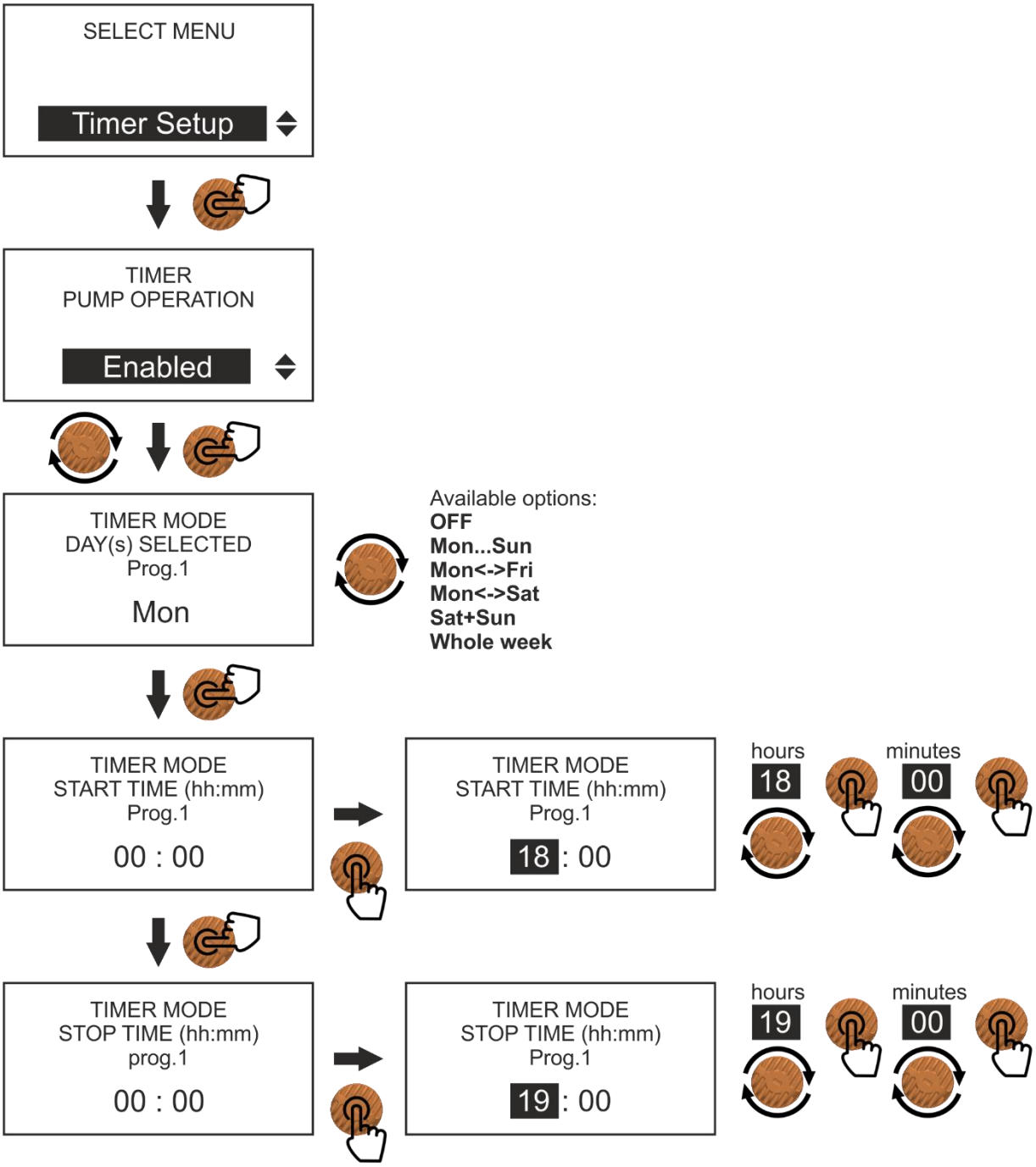

3.10 *SETTINGS*

3.10.1 General e Security

The settings menu is divided into two categories: ***General Settings*** *and* ***Safety Settings****: in General Settings you will find all those basic settings encountered during the pump initialisation, such as the choice of language, the setting of the date / time, the pump performance, etc.*
In the Security settings, on the other hand, there are settings such as the choice of the protection password, the delay in activating the level alarm, etc.
All possible settings are listed below:

ENGLISH

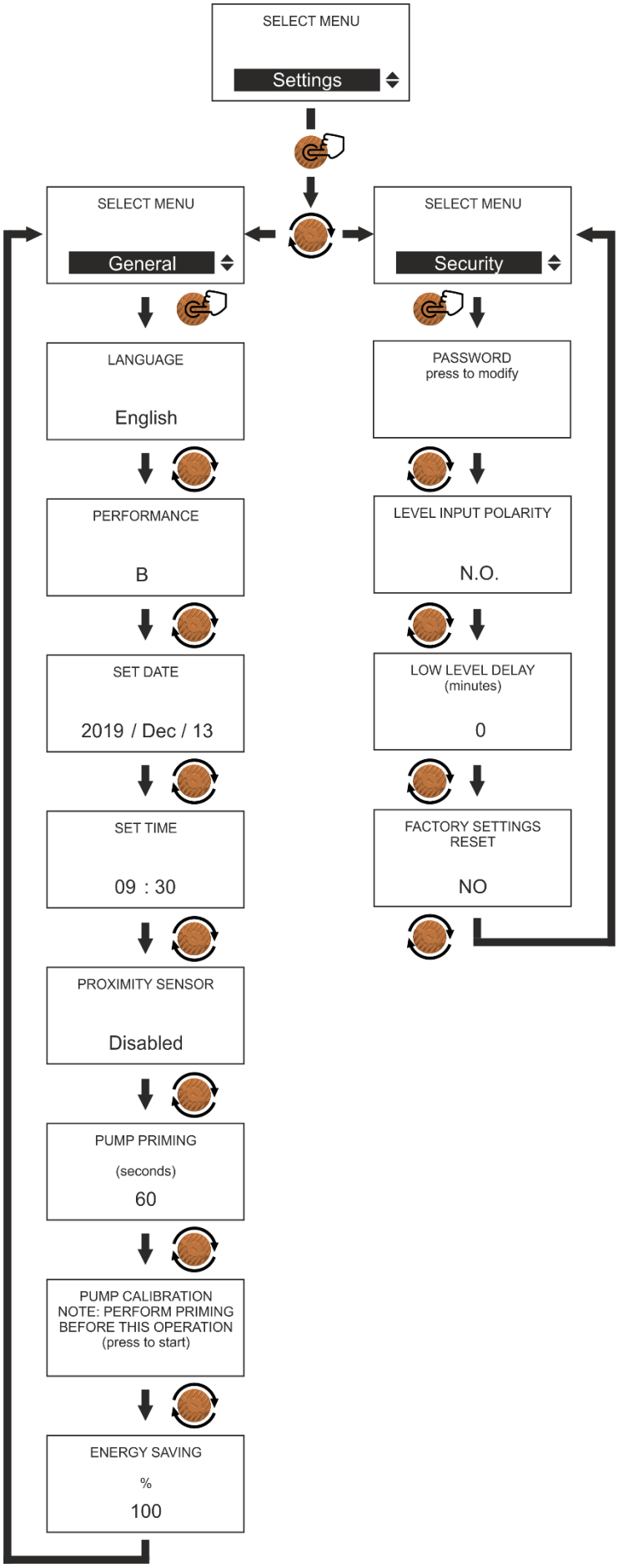
SELECT MENU
Settings
SELECT MENU
General
SELECT MENU
Security
LANGUAGE
English
PASSWORD
press to modify
PERFORMANCE
B
LEVEL INPUT POLARITY
N.O.
SET DATE
2019 / Dec / 13
LOW LEVEL DELAY
(minutes)
0
SET TIME
09 : 30
FACTORY SETTINGS
RESET
NO
PROXIMITY SENSOR
Disabled
PUMP PRIMING
(seconds)
60
PUMP CALIBRATION
NOTE: PERFORM PRIMING
BEFORE THIS OPERATION
(press to start)
ENERGY SAVING
%
100

3.10.2 General > Energy saving

It is possible to change the brightness of the display during its normal operation, this to limit current absorption and to protect the display from overheating and therefore increase its life. The brightness can be changed from 100% (maximum brightness) to 10% (minimum brightness); once the percentage has been chosen, the display will drop its brightness after 1 minute, if you act on the encoder the brightness will return to the maximum value until it is no longer touched for more than 1 minute. Here are the steps to set up this feature:

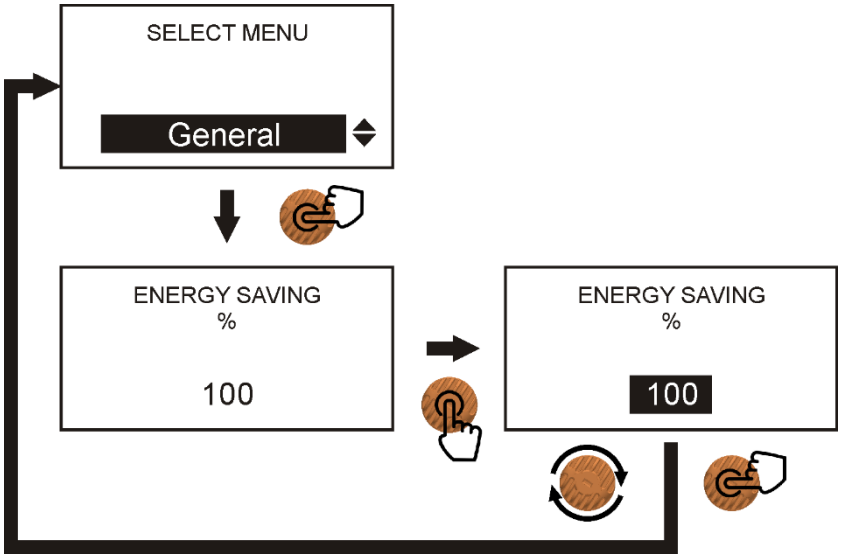

3.10.3 Generals > Proximity sensor

*This function allows you to enable/disable the proximity sensor (not supplied with the pump) which signals, if enabled, the presence or absence of the passage of water inside the system to be treated: in the event of no flow the flashing *** FLOW *** will appear on the display.*
Here are the steps to set up this feature:

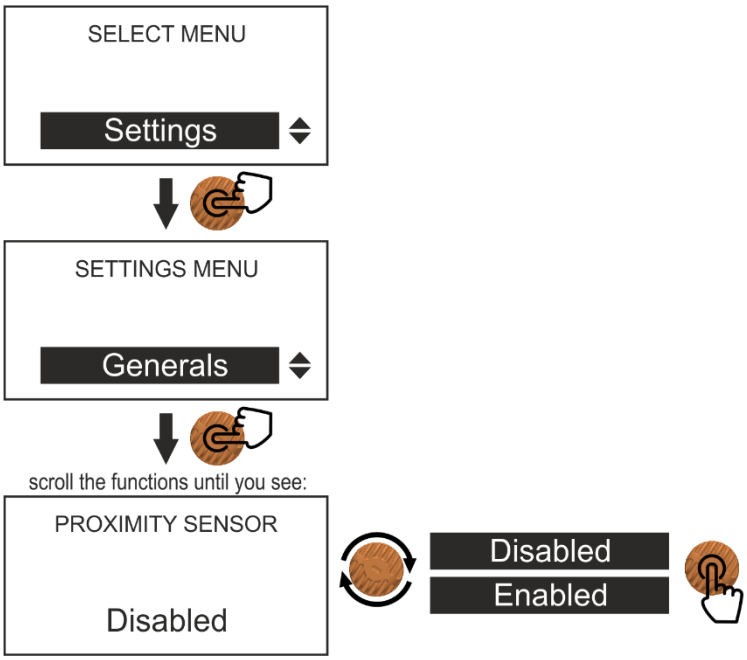

Proximity sensor's connection

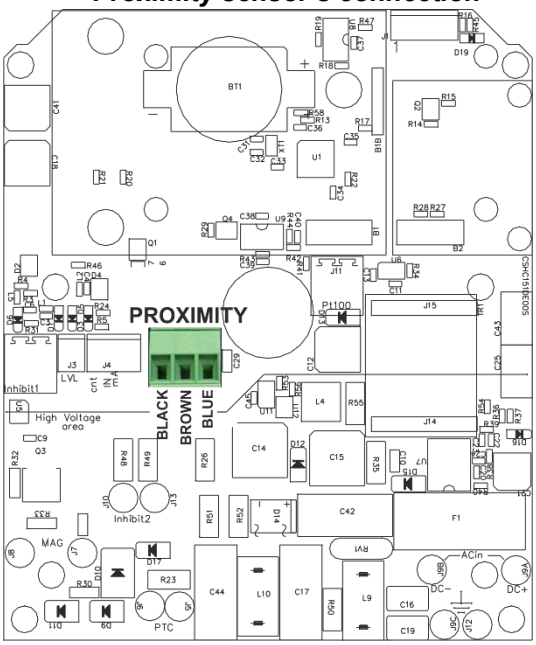

3.10.4 Security > Password

It is possible to set a security password to prevent unauthorized access to the pump configuration menus. ***If the user forgets or loses his password, he must contact our Assistance.***
Here are the steps to set up this feature:

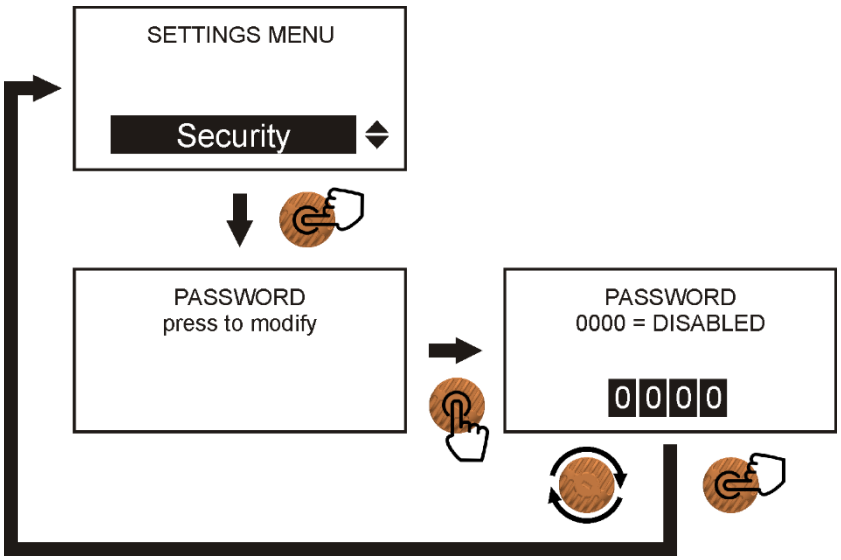

3.10.5 Security > Level Input Polarity

It is possible to invert the polarity of the level probe connected to the pump from Normally Open (N.O.) to Normally Closed (N.C.) and vice versa.
Here are the steps to set up this feature:

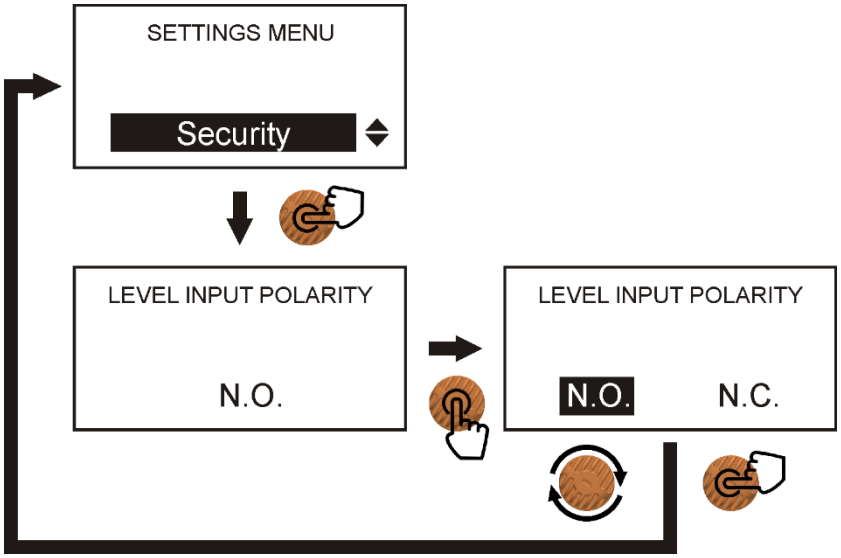

3.10.6 Security > Low Level Delay

With this function it is possible to delay the stop of the pump (and of the dosage) following the activation of the tank level sensor.
*When this function is active, and the level of the chemical reaches the minimum, the level alarm is activated on the pump (on display, in the lower right corner, the text *** LVL *** will appear) but the pump continues to dose for the time set, after which it stops.*
When using a suction lance that maintains a safety margin, activating the level (without stopping the dosage) allows you to have time to set up a new tank, without stop the pump dosing. This ensures better continuity of dosage.
ATTENTION: this function must be activated only if you are using the suction lance with safety margin like the LAFL of AQUA SPA (see photo below).

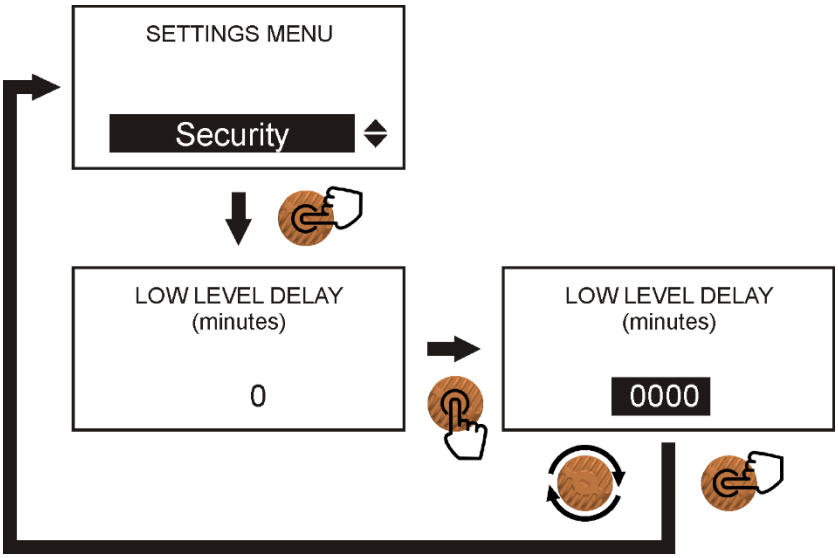

Next are the steps to set up this function:

It is possible to set a delay in minutes according to the size of the tank in use and the quantity dosed by the pump, to help the installer, a table with the settable times is presented at the bottom of this manual.

3.10.7 Security > Factory Settings restore

It is possible to reset the pump to factory settings using this function.
ATTENTION: this will delete all the data previously set and all the statistics with the exception of the counter of the total strokes (see paragraph 3.10).
Here are the steps to set up this feature:

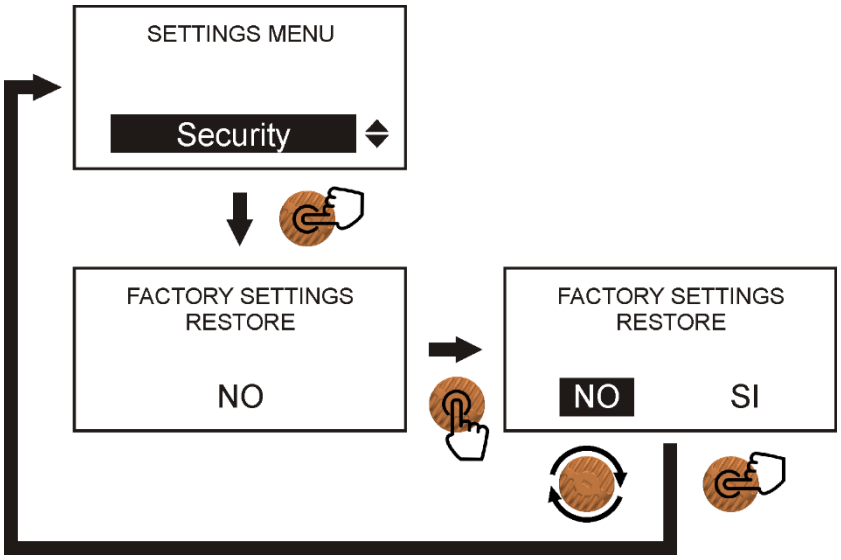

3.11 *STATISTICS*

During normal pump operation, the electronic board stores some datas during its operation; these data can be viewed within the "STATISTICS" menu. In this menu you can find the number of total strokes and the volume delivered (in liters).
Here are the steps to set up this feature:

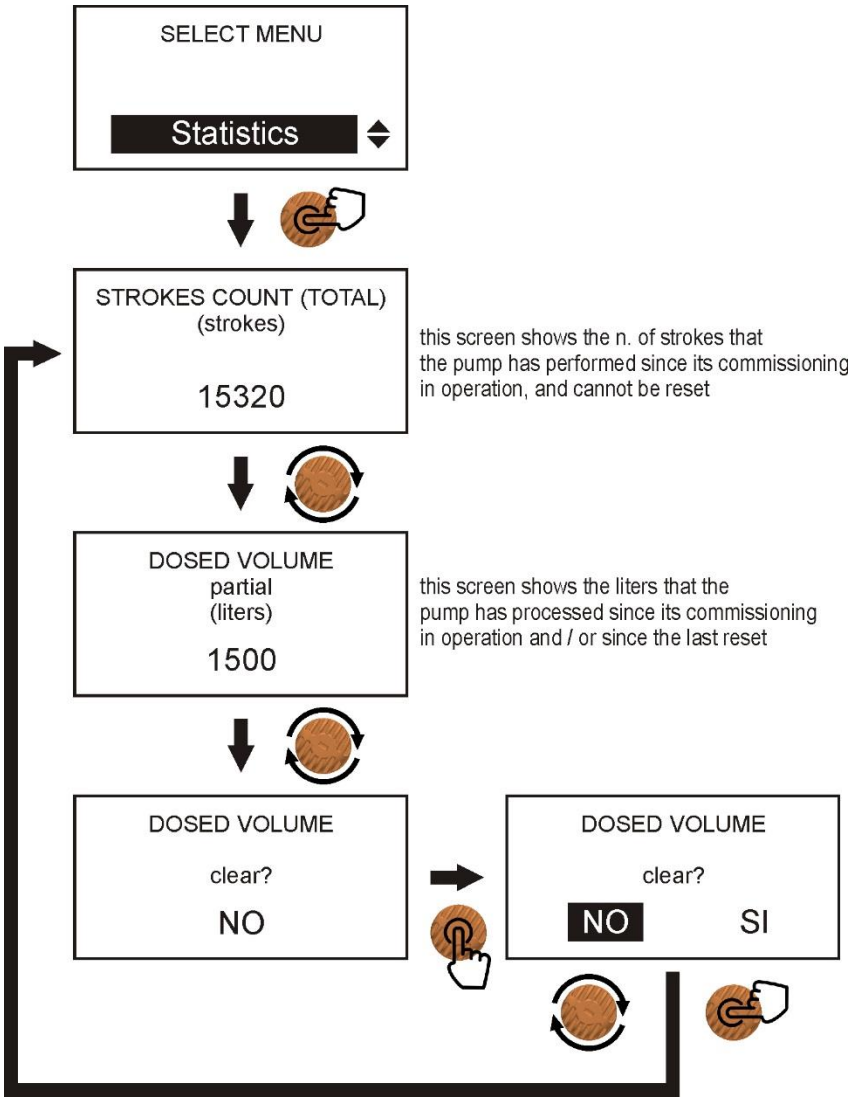

4. DOSING PUMPS INSTALLATION RULES

Strictly follow the instructions for a correct installation of the dosing pump to avoid malfunctions. The most frequent cases are described below:

• Locate the pump as shown in Figure 1, bearing in mind that it can be mounted either below or above the level of the chemical to be dosed within the maximum limit of 2 meters (we suggest 1.5 meters). The injection point must always be placed higher than the chemical to be injected.

• If the system to be treated works at atmospheric pressure and the chemical tank must absolutely be positioned higher than the injection point (Figure 2), periodically check the functionality of the injection valve (I), as its excessive wear could lead to unintentional injection of the chemical into the plant due to gravity (even with the dosing pump stopped). If the problem persists, insert a counter-pressure valve (V) correctly calibrated between the dosing pump and the injection point.

• For chemicals that emit aggressive fumes, do not install the pump on top of the tank unless the tank is hermetically sealed (Figure 3).

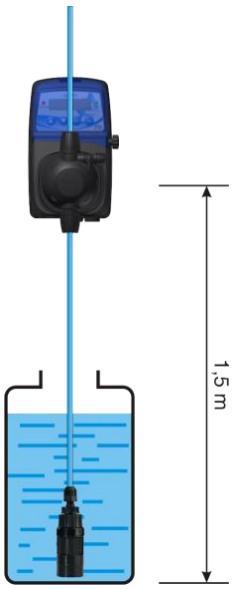

Figure 1

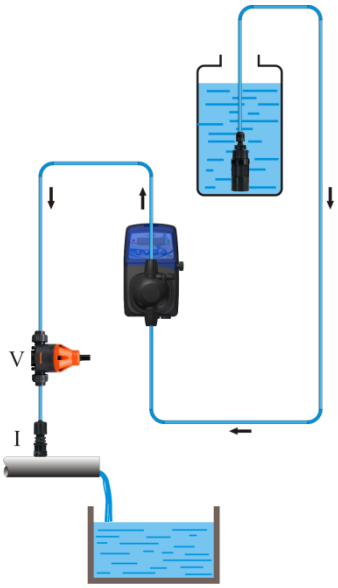

Figure 2

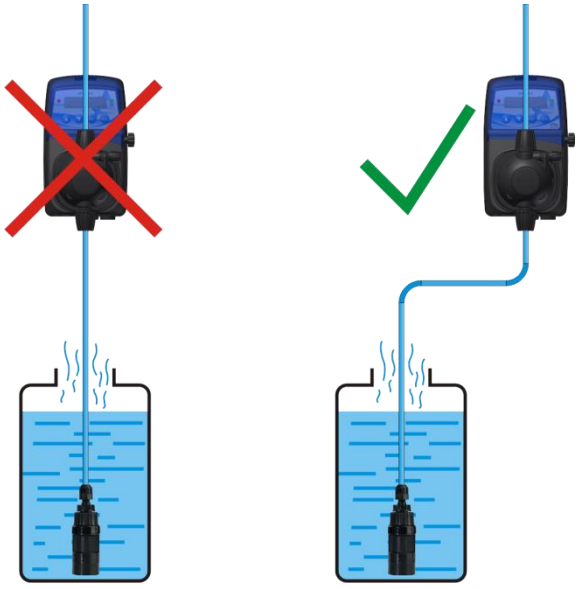

Figure 3

5. ELECTRICAL CONNECTIONS

5.1 HC151+ MULTI / HC200+ MULTI model pump

The connector on the bottom of the pump allows the connection of an external signal coming from a pulse emitting water meter or a mA signal. Obviously, if a pulse emitting water meter is connected, a mA signal cannot be connected and vice versa. The pump is also equipped with a BNC connector for connecting a level probe (not included in the package).

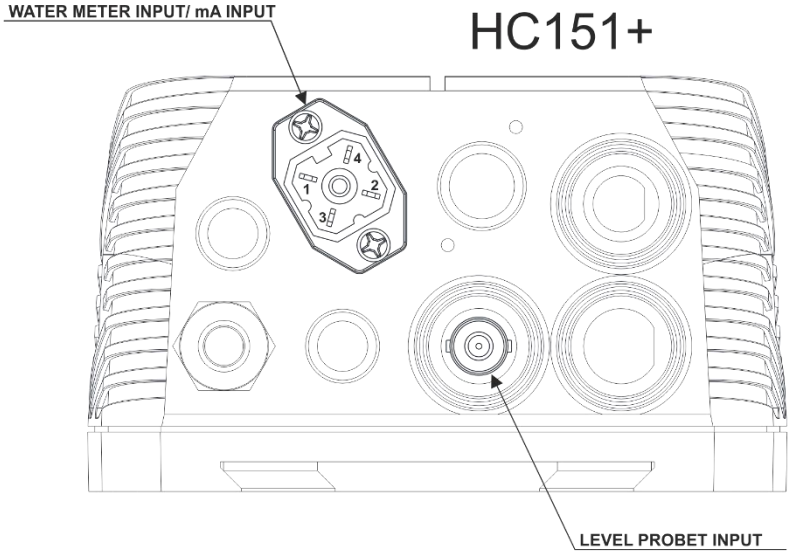

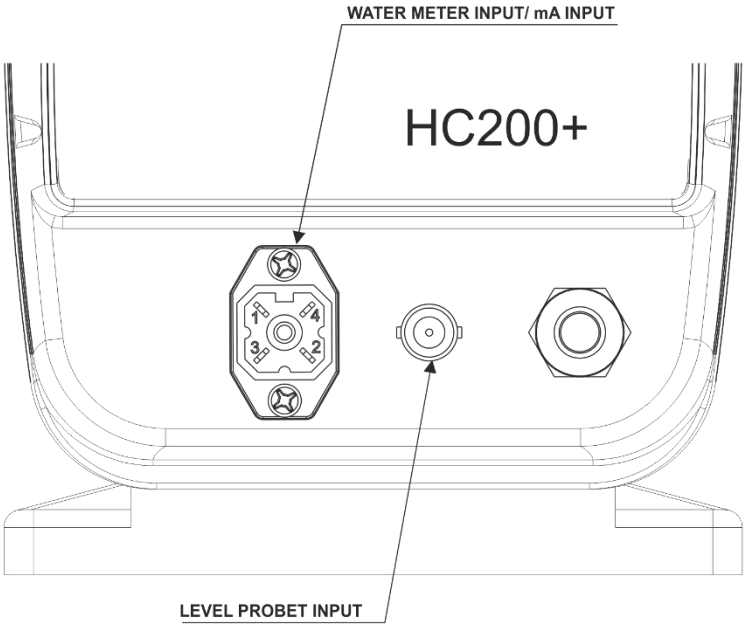

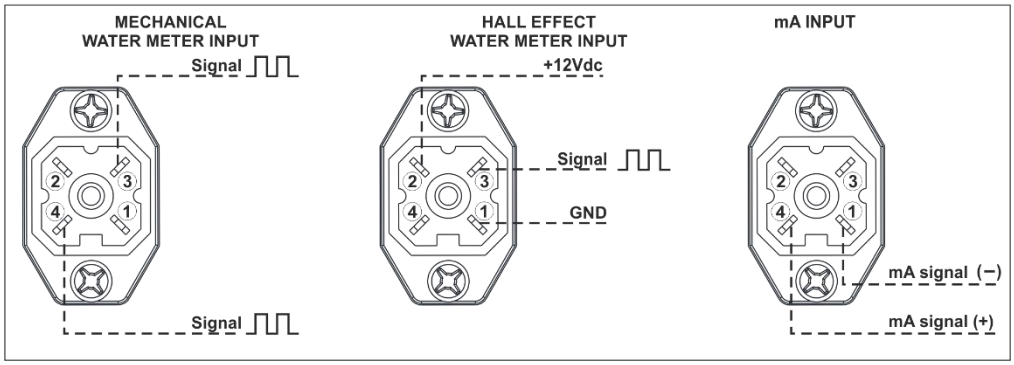

6. TROUBLESHOOTING

The solenoid driven dosing pump is a relatively robust device, therefore the chances of mechanical failures are low. Sometimes chemical leaks may occur from nipples or loose hose nuts of the pump head or simply due to breakage of the discharge pipe. If one of the above cases occurs, user has to first disconnect the unit from the power supply, then replaces the damaged part, cleans the unit from any chemical leaks, then restart the pump.

6.1 PROBLEM – CAUSE – SOLUTION

Below are listed some of the problems that may occur, the causes and solutions

PROBLEM	POSSIBLE CAUSE	SOLUTION
The pump does not switch on	The pump is not powered The protection fuse is blown up. The electronic board is damaged	Connect the pump to the mains. Replace the fuse. Replace the electronic board.
The pump does not dose but the solenoid is working	The foot filter is obstructed. The suction tube is empty, the pump is not primed. Air bubbles in the hydraulic circuit. The chemical in use generates gas	Clean the foot filter. Repeat the priming procedure. Check nipples and hoses Open the bleed valve and let the air goes out. Replace the pump head with automatic bleed version.
The pump does not dose and the solenoid does not works or the stroke is greatly muffled.	Crystals formation, valve occlusion and / or the balls are blocked. The injection valve is obstructed	Clean the valves and try to circulate water instead of the chemical product. Replace the valves of the pump head. Replace the injection valve.

7. CLEANING AND MAINTENANCE

7.1 CLEANING THE PUMP

The pump must be periodically cleaned in order to ensure its efficiency. We suggest to carry out regular cleaning during maintenance period.
Before carrying out any maintenance or cleaning operations on the dosing pump, it is necessary to:
1. Make sure that it is electrically disabled (both polarities) by disconnecting the conductors from the contact points of the power supply by opening the omnipolar switch;
2. Eliminate in the most appropriate and gradual way, (paying the utmost attention not to generate splashes), the existing pressure in the pump body and in the delivery pipe, by opening the appropriate air bleed valve.
3. Remove the protective cover of the pump body, to highlight any underlying leaks and encrustations;
4. Clean any incrustations due to leaks or drips on the pump body or on the entire pump structure, paying particular attention to the lower part of the pump where, usually, any incrustations due to drips accumulate;
5. Reassemble the cover of the pump body, the delivery and suction pipes, close the air bleed valve and reconnect the pump electrically;
6. Carry out priming if necessary and restore the normal operating status of the pump.

7.2 PUMP MAINTENANCE

Under normal operating conditions, the metering pump should be checked monthly.
To avoid malfunctions or sudden stops, carefully check the following items:

- check that the electrical and hydraulic connections are intact;
- check for any leaks on the connections of the pump head or the injection valve;

- check that there are no parts of the pump or pipes corroded.

Always empty the pump head from chemical, if there could still be presence of dangerous chimica inside the pump head it is mandatory to declare it filling the RETURN MATERIAL AUTHORIZATION module.
Always use original spare parts if it is necessary to replace worn parts

All technical assistance operations must be performed only by expert and authorized personnel. If the pump requires direct assistance from the manufacturer, it is necessary to remove all the liquid inside the pump head and dry it BEFORE packing it in its original box!

8. WARRANTY

The product is covered by the manufacturer's warranty for manufacturing defects. The methods and conditions are set forth in the "General Conditions of Sale" document of AQUA SpA.

STATUS MESSAGES

In the lower right corner of the dosing pump display, various status messages may appear that indicate the current condition of the device.
For a better understanding, all status messages and their meaning are listed below:

Status messages	***Description***
Stand-by	*Indicates that the dosing pump is paused.*
LVL	*This indicates that the level sensor connected to the dosing pump has detected a lack of chemical product inside the tank.*
FLOW	*This indicates that the flow sensor connected to the dosing pump has detected a lack of flow or insufficient flow inside the probe holder.*
PTC	*Indicates that the solenoid inside the dosing pump has overheated and the thermal protector (PTC) has stopped operation to prevent damage. The message disappears when the temperature drops below a safety value.*
MAX	*(only for HC151+ PH/RX/CL pumps): indicates that the measurement read by the probe connected to the dosing pump is higher than the maximum threshold set.*
MIN	*(only for HC151+ PH/RX/CL pumps): indicates that the measurement read by the probe connected to the dosing pump is lower than the minimum threshold set.*
OFA	*(only for HC151+ PH/RX/CL pumps): Indicates that the setpoint was not reached within the time indicated during activation of the Over feed alarm function.*
OVER	*(only for HC151+ MULTIFUNCTION pumps): Indicates that the electronics are unable to store in memory the pulses arriving from a water meter because they exceed the capabilities of the microcontroller; this appears with the 1xN or PPM function.*
OFF	*(for HC151+ PH/RX/CL pumps only): indicates that, if the INHIBIT function is active and the recirculation pump is off, the dosing pump stops.*

EXPLODED VIEWS

HC151+ EXPLODED VIEW

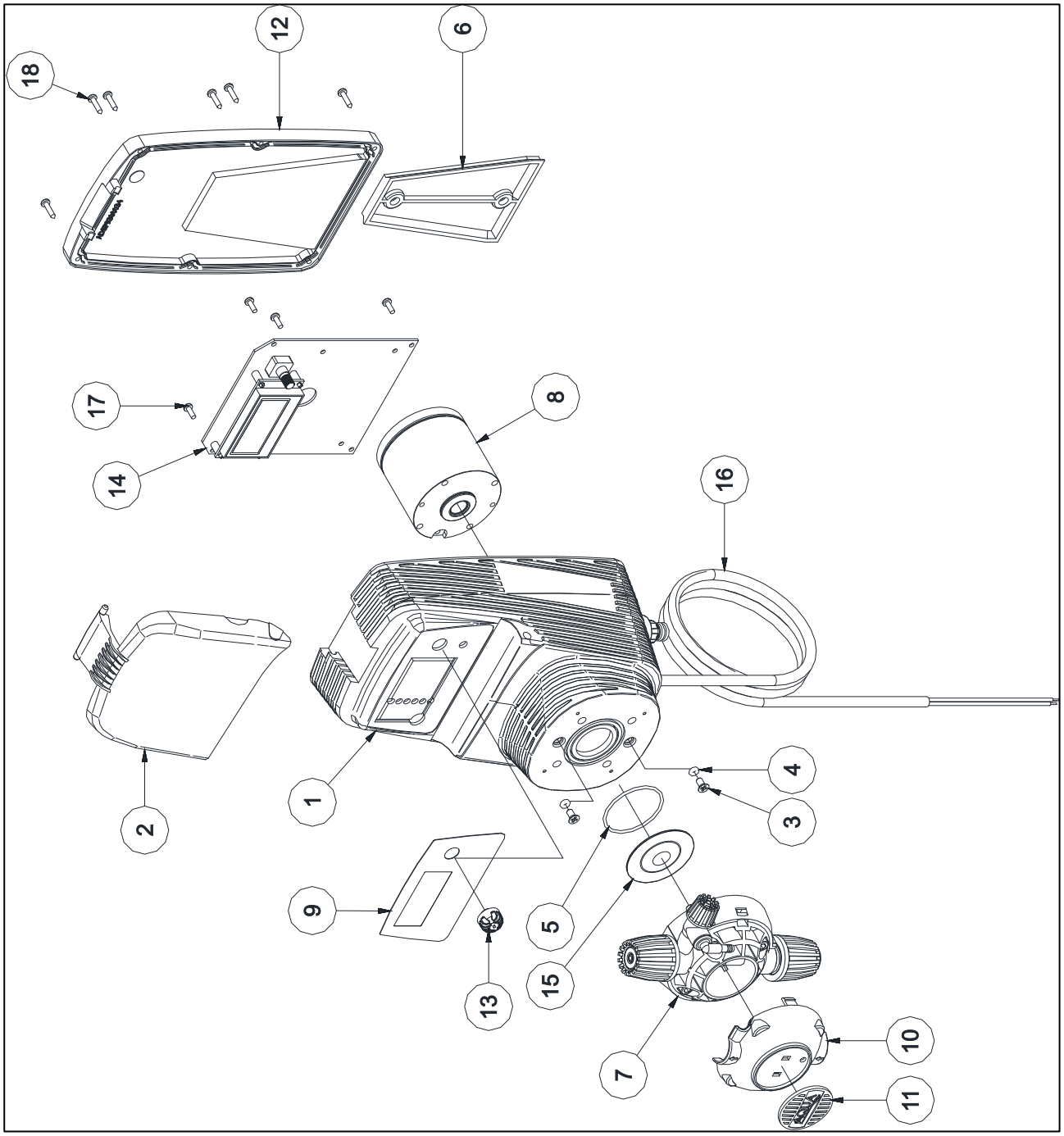

HC151+ EXPLODED VIEW

N°	Codice *Code*	Descrizione *Description*	Quantità *Quantities*
1	ADSP9300058	CASSA HC151+ PP+20% FV NERA *HC 151+ PP+20% GF BLACK HOUSING*	1
2	ADSP9300061	VETRINO TRASPARENTE HC151+ *HC151+ TRANSPARENT FRONT COVER*	1
3	ADSP6000708	VITE M4X8 UNI 7688 (AF-TSTC) INOX A2 *M4X8 UNI 7688 (AF-TSTC) SS A2 SCREW*	2
4	ADSP5007072	OR “R1” NBR – 2,60X1,90 *NBR – 2,60X1,90 O-RING*	2
5	ADSP5007117	OR – RIF. 2150 – FPM *FPM 2150 ORING*	1
6	ADSP6020221	STAFFA FISSAGGIO A PARETE *WALL FIXING BRACKET*	1
7	ADSP9000I05	CORPO POMPA 1-14 PVDF-CE-VT INCOMPLETO *1-14 PVDF-CE-VT INCOMPLETE PUMP HEAD*	1
7	ADSP900PI06	CORPO POMPA 1-14 PVDF-CE-DT INCOMPLETO *1-14 PVDF-CE-DT INCOMPLETE PUMP HEAD*	1
8	ADSP6000295	MAGNETE COMPLETO D60 VERS.2 230V SILENZIOSO *230V D60 COMPLETE SOLENOID*	1
8	ADSP6000287	MAGNETE COMPLETO D70 230V – CORSA CORTA - SILENZIOSO *230V D70 COMPLETE SOLENOID*	1
8	ADSP6000536	MAGNETE COMPLETO D80 4l/20bar 230V – (MOD.8) - SILENZIOSO *230V D80 COMPLETE SOLENOID*	1
9	ADSP7000772	ETICHETTA POLICARBONATO HC151+ MULTI/PH-RX-CL *HC151+ MULTI/PH-RX-CL POLICARBONATE ADHESIVE LABEL*	1
10	ADSP9000022	COVER NERO CORPO POMPA 1-14LT HC897 *1-14LT PUMP HEAD BLACK COVER*	1
11	ADSP9000003	TARGHETTA NERA CON LOGO AQUA PER CORPO POMPA 1-14LT *1-14LT PUMP HEAD BLACK PLATE WITH LOGO AQUA*	1
12	ADSP9300034L	COPERCHIO POSTERIORE HC151 DGT PP NERO CON GUARNIZ. *HC151 DGT PP BACK COVER WITH GASKET*	1
13	ADSP9300072	MANOPOLA ENCODER HC151+ *HC151+ KNOB FOR POTENTIOMETER*	1
14	ADSP9300083	SKD HC151+ MULTIFUNZIONE 100÷240Vac *HC151+ MULTIFUNCTION 10÷240Vac ELECTRONIC BOARD*	1
15	ADSP9200001	DIAFRAMMA PTFE DYNEON 1614/1645 1-14L HC897 M12x1 *1614/1645 1-14L HC897 M12x1 PTFE DYNEON DIAPHRAGM*	1
16	ADSP6020281	CAVO H05VV-F 3x0,75 METRI 3 + PRESSACAVO PG7 E FASTON FEMMINA 2,8x0,8 *H05VV-F 3x0,75 POWER SUPPLY CABLE 3 METERS W/OUT PLUG*	1
17	ADSP6000749	VITE 3x8 (TCTC) INOX A2 – SERIE HILO *3x8 SS A2 HILO SERIES SCREW*	4
18	ADSP6000714	VITE 2,9x13 UNI 6954 (TCTC) *2,9x13 UNI6954 SCREW*	6

HC200+ EXPLODED VIEW

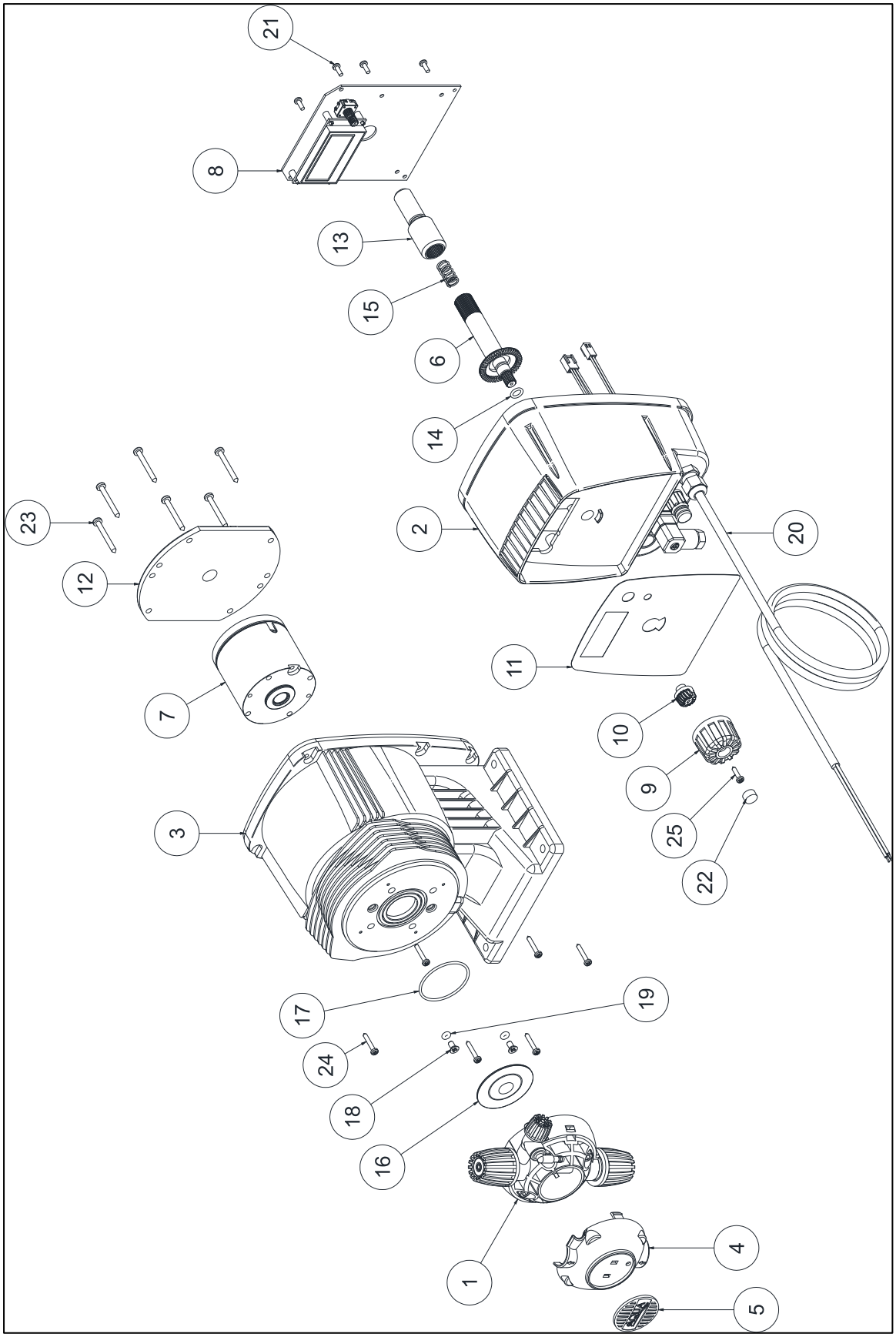

HC200+ EXPLODED VIEW

N°	Codice *Code*	Descrizione *Description*	Quantità *Quantities*
1	ADSP900PI05	CORPO POMPA 1-14 PVDF-CE-VT INCOMPLETO *1-14 PVDF-CE-VT INCOMPLETE PUMP HEAD*	1
1	ADSP900PI06	CORPO POMPA 1-14 PVDF-CE-DT INCOMPLETO *1-14 PVDF-CE-DT INCOMPLETE PUMP HEAD*	1
2	ADSP9300063	CASSA ANTERIORE HC200+ NERA *HC200+ FRONT CASING BLACK COLOR*	1
3	ADSP9300059	CASSA POSTERIORE HC200+ NERA *HC200+ REAR CASING BLACK COLOR*	1
4	ADSP9000022	COVER NERO CORPO POMPA 1-14LT HC897 *1-14LT PUMP HEAD BLACK COVER*	1
5	ADSP9000003	TARGHETTA NERA CON LOGO AQUA PER CORPO POMPA 1-14LT *1-14LT PUMP HEAD BLACK PLATE WITH LOGO AQUA*	1
6	ADSP6000759	PERNO REGOLAZIONE CORSA LAVORATO *STROKE LENGTH SHAFT*	1
7	ADSP6000295	MAGNETE COMPLETO D60 VERS.2 230V SILENZIOSO *230V D60 COMPLETE SOLENOID*	1
7	ADSP6000287	MAGNETE COMPLETO D70 230V – CORSA CORTA - SILENZIOSO *230V D70 COMPLETE SOLENOID*	1
8	ADSP9300083	SKD HC151+ MULTIFUNZIONE 100÷240Vac *HC151+ MULTIFUNCTION 10÷240Vac ELECTRONIC BOARD*	1
9	ADSP6000507	MANOPOLA REGOLAZIONE CORSA AQUA *STROKE LENGHT ADJUSTMENT KNOB*	1
10	ADSP9300072	MANOPOLA ENCODER HC151+ *HC151+ KNOB FOR ENCODER*	1
11	ADSP7000774	ETICHETTA POLICARBONATO HC200+ MULTI/PH-RX *HC200+ MULTI/PH-RX POLICARBONATE ADHESIVE LABEL*	1
12	ADSP6000738	INSERTO REGOLAZIONE CORSA 04-18 CON PIASTRA *04-18 STROKE LENGTH ADJUSTMENT INSERT WITH PLATE*	1
13	ADSP6000739	VITE REGOLAZIONE CORSA 04-18 *04-18 STROKE LENGTH ADJUSTMENT SCREW*	1
14	ADSP5007035	OR – RIF. 106 – FPM *FPM 106 O-RING*	1
15	ADSP5003021	MOLLA RITORNO REGOLAZIONE CORSA HC101 *HC101 RETURN SPRING STROKE LENGHT ADJUSTMENT*	1
16	ADSP9200001	DIAFRAMMA PTFE DYNEON 1614/1645 1-14L HC897 M12x1 *1614/1645 1-14L HC897 M12x1 PTFE DYNEON DIAPHRAGM*	1
17	ADSP5007117	OR – RIF. 2150 – FPM *FPM 2150 ORING*	1
18	ADSP6000708	VITE M4X8 UNI 7688 (AF-TSTC) INOX A2 *M4X8 UNI 7688 (AF-TSTC) SS A2 SCREW*	2
19	ADSP5007072	OR “R1” NBR – 2,60X1,90 *NBR – 2,60X1,90 O-RING*	2
20	ADSP6020281	CAVO H05VV-F 3x0,75 METRI 3 + PRESSACAVO PG7 E FASTON FEMMINA 2,8x0,8 *H05VV-F 3x0,75 POWER SUPPLY CABLE 3 METERS W/OUT PLUG*	1
21	ADSP6000749	VITE 3x8 (TCTC) INOX A2 – SERIE HILO *3x8 SS A2 HILO SERIES SCREW*	4
22	ADSP6000542	TAPPO IN PVC NERO PER VITE M4 *PVC CAP FOR M4 SCREW*	1
23	MB010300	VITE 3,5 X 32 UNI 6954 (AF-TCTC) INOX A2 *3,5 X 32 STAINLESS STEEL SCREW*	6
24	ADSP6000800	VITE 2,9 X 19 UNI 6954 (AF-TCTC) INOX A2 *2,9 X 19 STAINLESS STEEL SCREW*	6
25	ADSP6000714	VITE 2,9 X 13 UNI 6954 (AF-TCTC) INOX A2 *2,9 X 13 STAINLESS STEEL SCREW*	1

PUMP HEAD EXPLODED VIEW

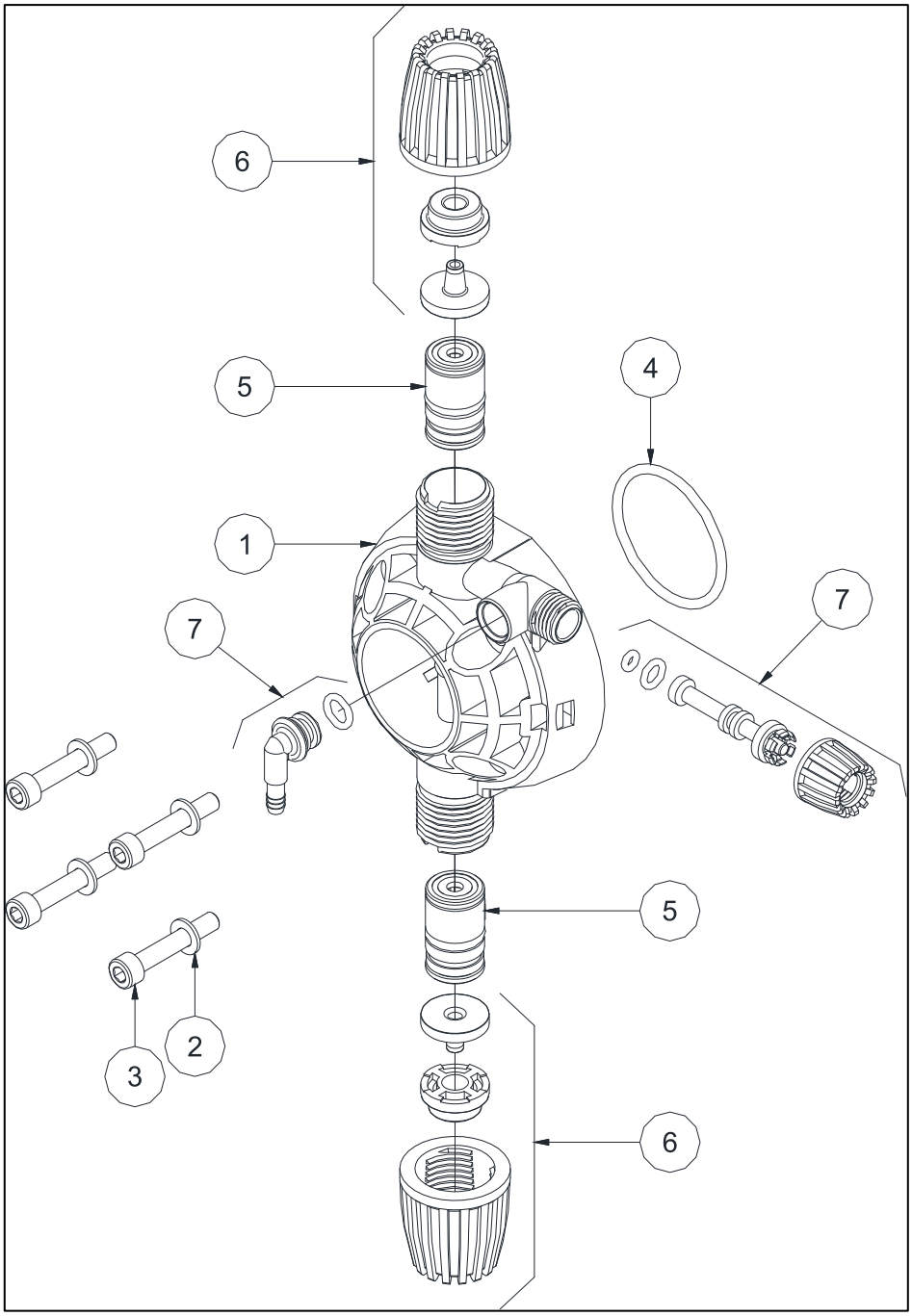

PUMP HEAD EXPLODED VIEW

N°	**Codice** ***Code***	**Descrizione** ***Description***	**Quantità** ***Quantities***
1	ADSP9000001	CORPO POMPA 1-14 PP NERO HC897M (VN) *1-14 PP BLACK PUMP HEAD*	1
1	ADSP9000001P	CORPO POMPA 1-14 PVDF BIANCO HC897 *1-14 PVDF WHITE PUMP HEAD*	1
2	ADSP6000701	RONDELLA PIANA D. 5 – UNI 6592 INOX A2 *D.5 WASHER – UNI 6592 SS A2*	4
3	ADSP9000016	VITE M5x30 UNI 5931 (TCEI) INOX A2 *M5x30 UNI 5931 SS A2 SCREW*	4
4	ADSP5007200	OR – RIF. 3143 (T.2,62xD.36,14) – FPM NERO *FPM 3143* (T.2,62xD.36,14) *ORING*	1
4	ADSP5007209	OR – RIF. 3143 (T.2,62xD.36,14) – EPDM NERO *EPDM 3143* (T.2,62xD.36,14) *ORING*	1
5	ADSP9005010	KIT GRUPPO VALVOLA ½” PP-GL-VT *½” PP-GL-VT VALVE KIT*	1
5	ADSP9005011	KIT GRUPPO VALVOLA ½” PP-GL-DT *½” PP-GL-DT VALVE KIT*	1
5	ADSP9005P12	KIT GRUPPO VALVOLA ½” PVDF-CE-VT *½” PVDF-CE-VT VALVE KIT*	1
5	ADSP9005P13	KIT GRUPPO VALVOLA ½” PVDF-CE-DT *½” PVDF-CE-DT VALVE KIT*	1
6	ADSP6500059	KIT FISSAGGIO PP ½” PER TUBO 4x6 *½” PP FIXING KIT FOR 4x6 HOSE*	1
6	ADSP6500060	KIT FISSAGGIO PVDF ½” PER TUBO 4x6 *½” PVDF FIXING KIT FOR 4x6 HOSE*	1
6	ADSP6500067	KIT ATTACCO TUBO 6x8 CON GHIERA DA ½” PP NERA *6x8 FIXING KIT WITH ½” BLACK PP HOSE NUT*	2
6	ADSP6500068	KIT ATTACCO TUBO 6x9 CON GHIERA DA ½” PP NERA *6x8 FIXING KIT WITH ½” BLACK PP HOSE NUT L*	2
6	ADSP6500063	KIT ATTACCO TUBO 6x10 CON GHIERA DA ½” PP NERA *6x8 FIXING KIT WITH ½” BLACK PP HOSE NUT*	2
7	ADSP6500072	KIT VITE SPURGO + PORTAGOMMA PP-VT CORPO POMPA *AIR BLEED KIT + PP-VT HOSE FITTING FOR PUMP HEAD*	1
7	ADSP6500072P	KIT VITE SPURGO + PORTAGOMMA PVDF-VT CORPO POMPA *AIR BLEED KIT + PP-VT HOSE FITTING FOR PUMP HEAD*	1
7	ADSP6500073	KIT VITE SPURGO + PORTAGOMMA PP-DT CORPO POMPA *AIR BLEED KIT + PP-DT HOSE FITTING FOR PUMP HEAD*	1
7	ADSP650073P	KIT VITE SPURGO + PORTAGOMMA PVDF-DT CORPO POMPA *AIR BLEED KIT + PVDF-DT HOSE FITTING FOR PUMP HEAD*	1

AUTO BLEED PUMP HEAD EXPLODED VIEW

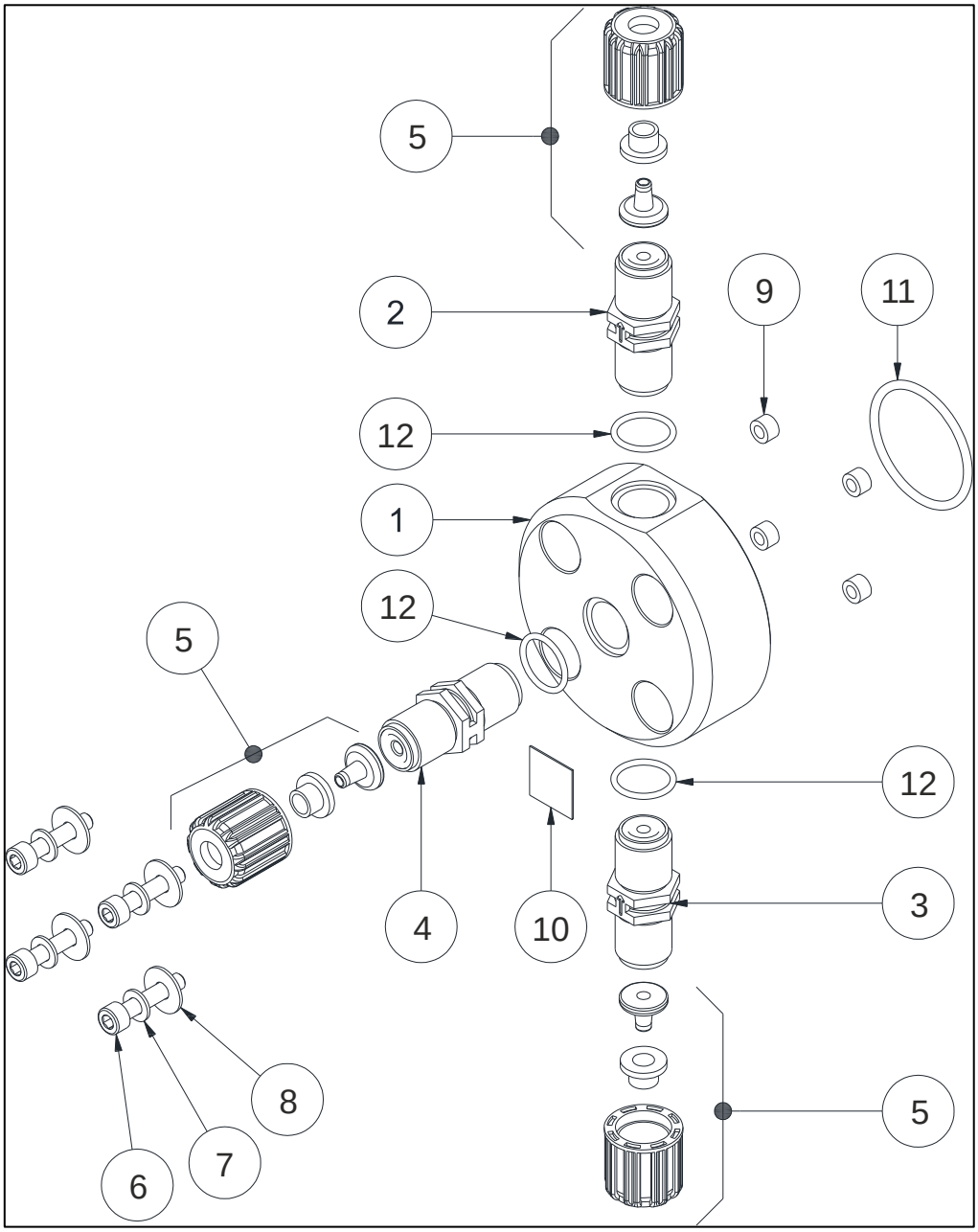

AUTO BLEED PUMP HEAD EXPLODED VIEW

N°	**Codice** ***Code***	**Descrizione** ***Description***	**Quantità** ***Quantities***
1	ADSP9000029	CORPO POMPA 1-14 PVC SPURGO AUTOMATICO *1-14 PVC AUTO BLEED PUMP HEAD*	1
2	ADSP5005033	GRUPPO VALVOLA 3/8" PER SPURGO PP-CE-VT *3/8" PP-CE-VT DEGAS VALVE KIT*	1
2	ADSP5005133	GRUPPO VALVOLA 3/8" PER SPURGO PP-CE-DT (OR2015 PTFE) *3/8" PP-CE-DT DEGAS VALVE KIT*	1
2	ADSP5005036	GRUPPO VALVOLA 3/8" PER SPURGO PVDF-CE-VT *3/8" PVDF-CE-VT DEGAS VALVE KIT*	1
2	ADSP5005038	GRUPPO VALVOLA 3/8" PER SPURGO PVDF-CE-DT *3/8" PVDF-CE-DT DEGAS VALVE KIT*	1
3	ADSP5005031	GRUPPO VALVOLA 3/8" PP-CE-VT *3/8" PP-CE-VT VALVE KIT*	1
3	ADSP5005131	GRUPPO VALVOLA 3/8" PP-CE-DT *3/8" PP-CE-DT VALVE KIT*	1
3	ADSP5005034	GRUPPO VALVOLA 3/8" PVDF-CE-VT *3/8" PVDF-CE-VT VALVE KIT*	1
3	ADSP5005037	GRUPPO VALVOLA 3/8" PVDF-CE-DT *3/8" PVDF-CE-DT VALVE KIT*	1
4	ADSP5005032	GRUPPO VALVOLA 3/8" PP-CE-HAST-VT *3/8" PP-CE-HAST-VT VALVE KIT*	1
4	ADSP5005132	GRUPPO VALVOLA 3/8" PP-CE-HAST-DT *3/8" PP-CE-HAST-DT VALVE KIT*	1
4	ADSP5005035	GRUPPO VALVOLA 3/8" PVDF-CE-HAST-VT *3/8" PVDF-CE-HAST-VT VALVE KIT*	1
4	ADSP5005135	GRUPPO VALVOLA 3/8" PVDF-CE-HAST-DT *3/8" PVDF-CE-HAST-DT VALVE KIT*	1
5	ADSP6500048	KIT FISSAGGIO PP 3/8" PER TUBO 4X6 *3/8" PP FIXING KIT FOR 4X6 HOSE*	3
5	ADSP6500013	KIT FISSAGGIO PVDF 3/8" PER TUBO 4X6 *3/8" PVDF FIXING KIT FOR 4X6 HOSE*	3
6	MB010040	VITE M5x25 UNI 5931 (TCEI) INOX A2 *M5x25 UNI 5931 SS A2 SCREW*	4
7	ADSP6000701	RONDELLA PIANA D. 5 – UNI 6592 INOX A2 *D. 5 WASHER – UNI 6592 SS A2*	4
8	MB010460	RONDELLA PIANA 5x15 – UNI 6592 INOX A2 *5x15 WASHER – UNI 6592 SS A2*	4
9	ADSP5007011	BUSSOLA PER CORPO POMPA D. 3,2 x 6,45 x 5,5 SANT64A *PUMP HEAD SCREW GASKET* D. 3,2 x 6,45 x 5,5 SANT64A	4
10	ADSP7000442	ETICHETTA FLOW PER COLLARE PORTASONDA DN50-63 *FLOW DIRECTION LABEL*	1
11	ADSP5007200	OR – RIF. 3143 (T.2,62 x D.36,14) FPM NERO *FPM 3143* (T.2,62 x D.36,14) ORING	1
11	ADSP5007209	OR – RIF. 3143 (T.2,62 x D.36,14) EPDM NERO *EPDM 3143* (T.2,62 x D.36,14) ORING	1
12	ADSP5007001	OR – RIF. 2062 – FPM NERO *FPM 2062 - ORING*	3
12	ADSP5007002	OR – RIF. 2062 – EPDM NERO *EPDM 2062 - ORING*	3

USE AND MAINTENANCE INSTRUCTIONS MANUAL FOR DOSING PUMP

HC151+ MULTI / HC200+ MULTI