ENGLISH

USE AND MAINTENANCE INSTRUCTIONS MANUAL FOR DOSING PUMP

HC151+CST **HC151+PImA** **HC200+CST**

AQUA INDUSTRIAL GROUP

FILTRATION - DOSING - DETERGENT & HYGIENE - POOL EQUIPMENT

CE

DECLARATION OF CONFORMITY

Company:	**AQUA S.p.A.**
Address:	**Via T. Crotti, 1 - 42018 - San Martino in Rio (RE)**

Hereby declares that the products named:

- **HC151+ CST**
- **HC200+ CST**
- **HC151+ PImA**

Responds to the principal features of the following European Directives:

- **2014/30/CE of 26/02/2014** - *Harmonization of the laws of the Member States relating to electromagnetic compatibility – EMC Directive*
- **2014/35/CE of 26/02/2014** - *Harmonization of the laws of the Member States relating to the making available on the market of electrical equipment designed for use within certain voltage limits – Low Voltage Directive*
- **2011/65/UE of 08/06/2011 with subsequent update 2015/863 of 31/03/2015** – *ROHS III Directives*
- **2012/19/UE of 04/07/2012** - *WEEE Directives for electrical and electronic waste*

This declaration is issued under the responsibility of Aqua S.p.A.

San Martino in Rio (RE)
Davide Vezzani
Certification Manager - Aqua S.p.A.

AQUA S.p.A.
Società soggetta a direzione e coordinamento di Finanza Cooperativa S.c.p.a. - Cap. Soc. € 10.052.488,00 Sottoscritto e Versato
S. Martino in Rio - 42018 - Reggio Emilia - ITALY - Sede legale: Via Crotti, 1 - Sede operativa: Via Bersella, 3 - Cod. Fisc. e P.IVA 02026440350 - Reg. Imprese di RE 02026440350
Ph. +39.0522.695805 - Fax +39.0522.646160 - www.aqua.it - email: aqua@aqua.it

ENGLISH

INDEX

1. GENERAL RULES 4

1.1 SHIPPING AND TRANSPORTING THE PUMP 4

1.2 INSTALLATION STANDARDS 4

1.3 PROPER USE OF THE PUMP 4

2. OPERATION 6

2.1 OVERALL DIMENSIONS 6

2.2 TECHNICAL FEATURES 6

2.3 HYDRAULIC FEATURES 7

2.4 PERFORMANCE GRAPHS 8

2.4.1 graphs relating to the 230V versions 8

2.5 CONTENT OF THE PACKAGE 9

3. HC151+ CST/HC200+ CST 10

3.1 HC151+ CST/HC200+ CST PUMP CONTROLS 10

3.2 HC151+ CST/HC200+ CST OPERATING MODE 10

3.3 MODIFICATION OF PUMP PERFORMANCE 11

4. HC151+ PImA 12

4.1 HC151+ PImA PUMP CONTROLS 12

4.2 MODIFICATION OF PUMP PERFORMANCE 12

4.3 HC151+ PImA OPERATING MODE 13

4.5 HOW TO CHOOSE THE PERFORMANCES OF A PUMP 14

4.6 HOW TO CALCULATE THE MULTIPLICATION VALUE (1xN) 14

4.7 HOW TO CALCULATE THE DIVISION VALUE (1:N) 14

5. DOSING PUMPS INSTALLATION RULES 15

6. ELECTRICAL CONNECTIONS 16

6.1 HC151+ PImA model pump 16

7. TROUBLESHOOTING 17

7.1 PROBLEM – CAUSE – SOLUTION 17

8. CLEANING AND MAINTENANCE 17

8.1 CLEANING THE PUMP 17

8.2 PUMP MAINTENANCE 18

9. WARRANTY 18

EXPLODED VIEWS 19

HC151+ 19

HC200+ 21

PUMP HEAD 23

AUTO BLEED PUMP HEAD 25

1. GENERAL RULES

Carefully read the warnings listed below as they provide important information regarding the rules for installation, use and maintenance.
Please keep this manual carefully for further reference.

1.1 SHIPPING AND TRANSPORTING THE PUMP

The equipment must be transported in its original packaging, organized and built in such a way as to minimize shocks and to protect the protruding parts that can be damaged. If there is a need for transport after the equipment has already been installed (e.g. for a return for repair or replacement), reuse the original packaging or a sufficiently sturdy packaging with the equipment protected with absorbent material (eg bubble wrap). The external packaging must be such as to ensure the safety of the equipment in the event of a fall from 1 meter in height.

1.2 INSTALLATION STANDARDS

Install the dosing pump so that it is easily accessible whenever maintenance is required. Never obstruct the place where the dosing pump is located.
The servicing and maintenance of the dosing pump and all its accessories must always be carried out by qualified personnel.
AQUA SpA cannot be held responsible for damage to persons or things caused by poor installation or incorrect use of the dosing pump.
Check that the ground is fully functional and corresponds to the regulations in force. Make sure there is a high sensitivity differential switch (0.03 A). Check that the pump ratings are compatible with those of the mains supply. Never install the pump directly in parallel with inductive loads (eg motors / solenoid valves) but if necessary use an "insulation relay". Inside the pump there are two protections: a varistor and a fuse.

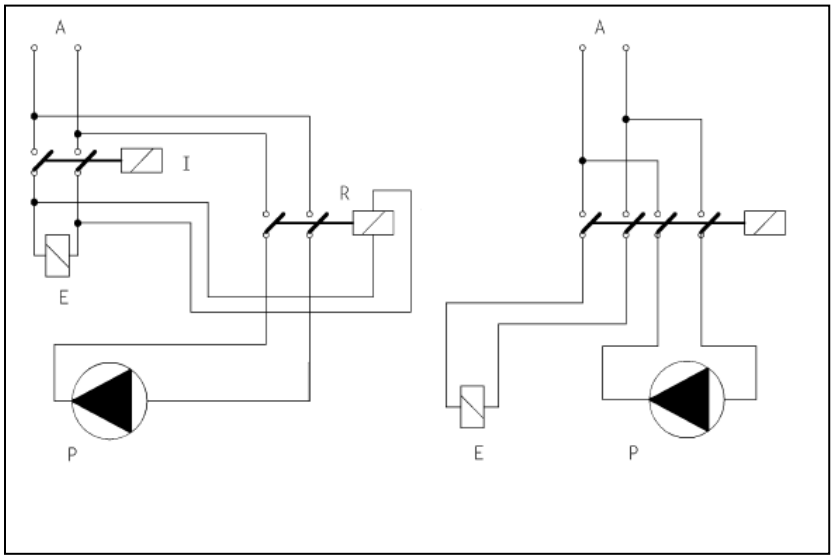

P: dosing pump

R: relay

I : Switcher or multi-pole security device

E: Motor or generally inductive charge

A: supply voltage

1.3 PROPER USE OF THE PUMP

The use of this pump must comply with the methods and instructions set out in this manual. The pump can dose chemicals that can be harmful to human health and for this reason it is essential that must be used by qualified personnel who adopt the appropriate safety methods and personal protective equipment.

AVOID IMPROPER USE of the equipment in order to avoid damage to things and people, due to uncontrolled splashes, drips, electrical contacts, etc.
The following uses can be considered improper uses, in indicative and non-exhaustive form:

- *Dosing of products not consistent with the materials with which the pump is made;*
- *Dosing of explosive and / or flammable products;*
- *Dosing of fluids with excessive viscosity (1000 cps), such as to prevent the priming of the pump itself;*
- *Dosage of food liquids, if intended to maintain such use;*

- *Avoid inverting the pump delivery and suction;*
- *Avoid powering the pump with voltages other than those indicated in the technical specifications;*
- *Avoid connecting any equipment other than specific equipment to the signal outputs (level, pulse counter, current signal, etc.);*

2. OPERATION

The HC151+ CST HC200+ CST and HC151+ PImA analogue pumps are solenoid driven dosing pumps that can operate at constant flow (CST version) or at proportional flow according to an external signal (PI-mA version). Depending on the model, there may be: a BNC connector for connecting a level sensor and / or a 4-pole connector for connection to a current signal (mA) or from a pulse-emitting water meter.

2.1 OVERALL DIMENSIONS

HC151+

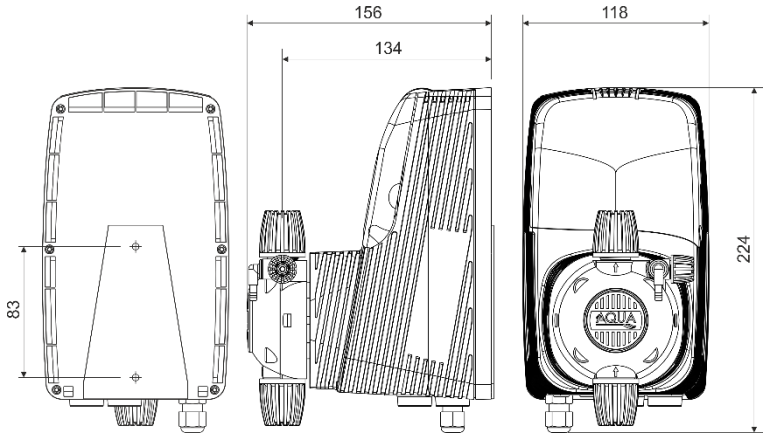

HC200+

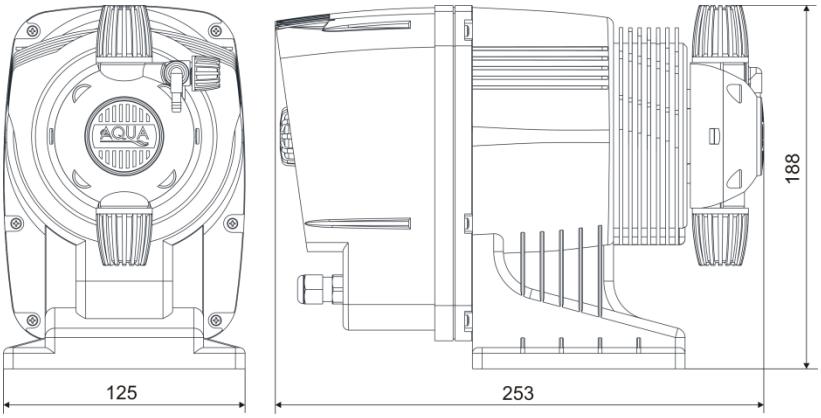

2.2 TECHNICAL FEATURES

Power supply:	*100÷240VAC ± 10% – 50/60Hz*
Insulation Class:	*CLASS I*
Absorbed power:	*see "2.3 - Hydraulic Features"*
Fusible:	*2 A – RIT*
Protection Grade:	*IP65*
Environmental conditions:	*Closed environment, altitude up to 2000m, room temperature from 5°C up to 40°C, maximum relative humidity 80% (linearly decreases until it is reduced to 50% at 40°C).*

THE EQUIPMENT, SUBJECT TO THIS DOCUMENT, ARE NOT INTENDED TO BE INSTALLED AND USED IN EXPLOSIVE ATMOSPHERE ENVIRONMENTS. IT ISN'T AN ATEX PUMP.

2.3 *HYDRAULIC FEATURES*

Hydraulic characteristics of the 230V version

SOLENOID	TYPE	FLOW RATE	PRESSURE	STROKES	INJECTION VALUE	ABSORBED POWER
		l/h	bar	spm	ml/stroke	Watt
60	A	1	7	100	0,17	13
		5	1		0,83	13
	B	3	7	150	0,33	16
		9	1		1	16
	C	5,5	6	180	0,51	22
		10	1		0,93	22
70	A	1,8	20	75	0,40	18
		4	1		0,89	18
	B	4	12	120	0,56	25
		7	1		0,97	25
	C	5,8	9	180	0,54	27
		14	1		1,30	27
80 (only HC151)	A	4	20	150	0,44	24
		10	1		1,11	24
	B	6,5	12	200	0,54	27
		13	1		1,08	27
	C	13,5	5	300	0,75	35
		20	1		1,11	35

The above data refer to tests carried out with water at room temperature. Values can fluctuate by 10%. With chemical products with a different viscosity than that of water, the flow rate data may undergo even sensitive variations.

Hydraulic characteristics of the 110V version

SOLENOID	TYPE	FLOW RATE	PRESSURE	STROKES	INJECTION VALUE	ABSORBED POWER
		l/h	bar	spm	ml/stroke	Watt
60	A	1,5	7	100	0,25	18
		5	1		0,83	18
	B	4,5	7	150	0,5	23
		7	1		0,78	23
	C	6	6	180	0,56	28
		8,8	1		0,81	28
70	A	1	20	75	0,22	21
		4,5	1		1	21
	B	4	12	120	0,56	31
		7	1		0,97	31
	C	6,8	9	180	0,63	41
		10,8	1		1	41
80 (only HC151)	A	3	17	150	0,33	27
		10	1		1,11	27
	B	7,5	12	200	0,63	36
		13	1		1,08	36
	C	11	5	230	0,80	44
		16	1		1,16	44

The above data refer to tests carried out with water at room temperature. Values can fluctuate by 10%. With chemical products with a different viscosity than that of water, the flow rate data may undergo even sensitive variations.

2.4 *PERFORMANCE GRAPHS*

2.4.1 graphs relating to the 230V versions

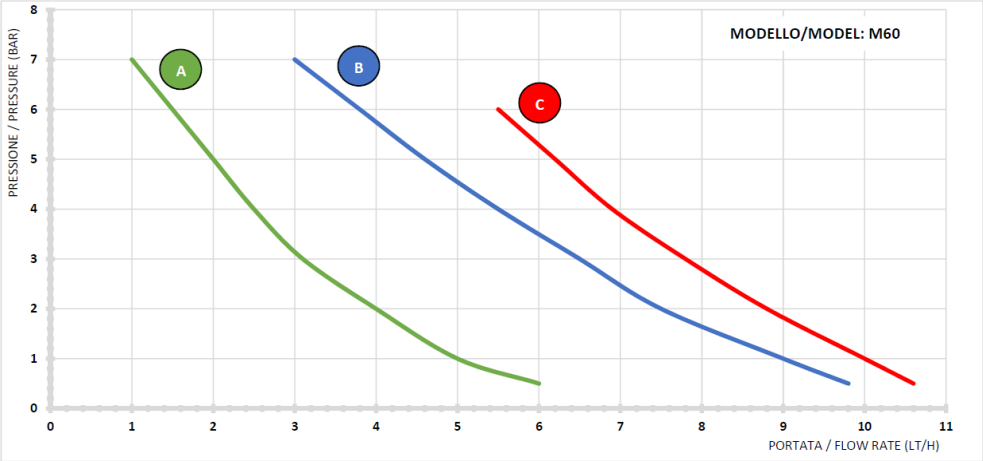

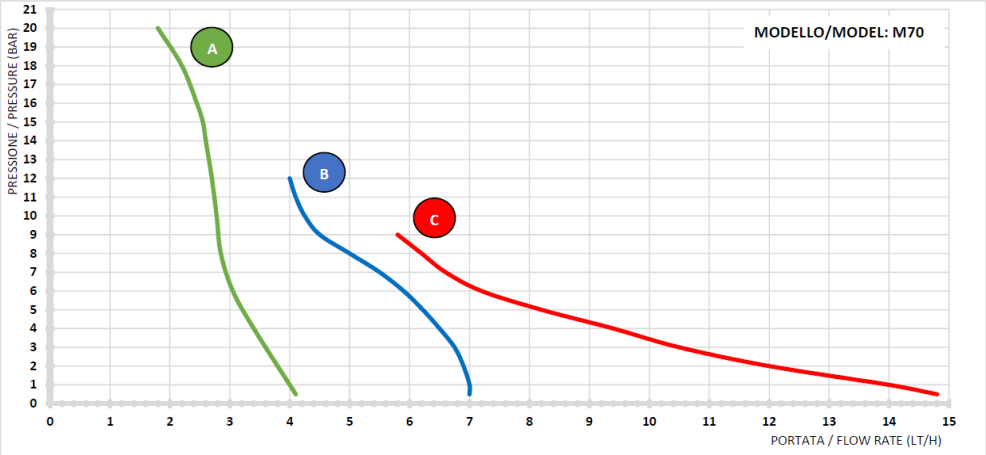

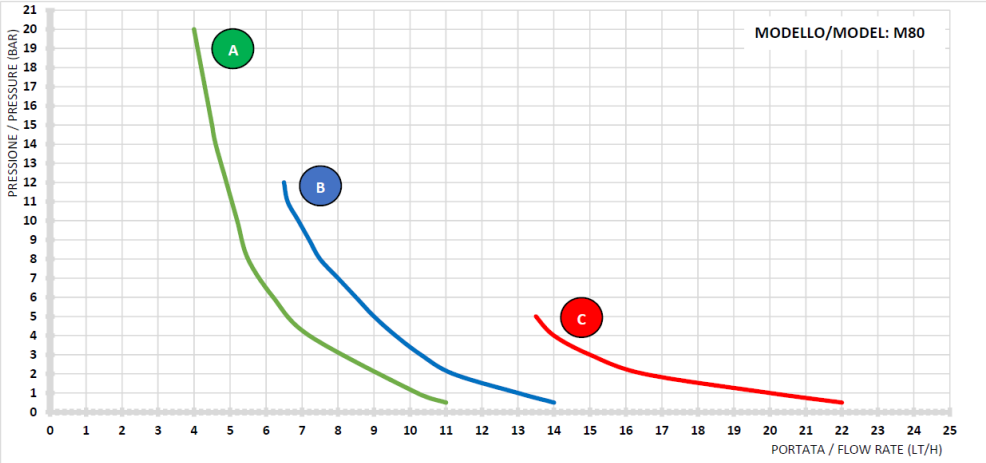

2.4.2 graphs relating to the 110V versions

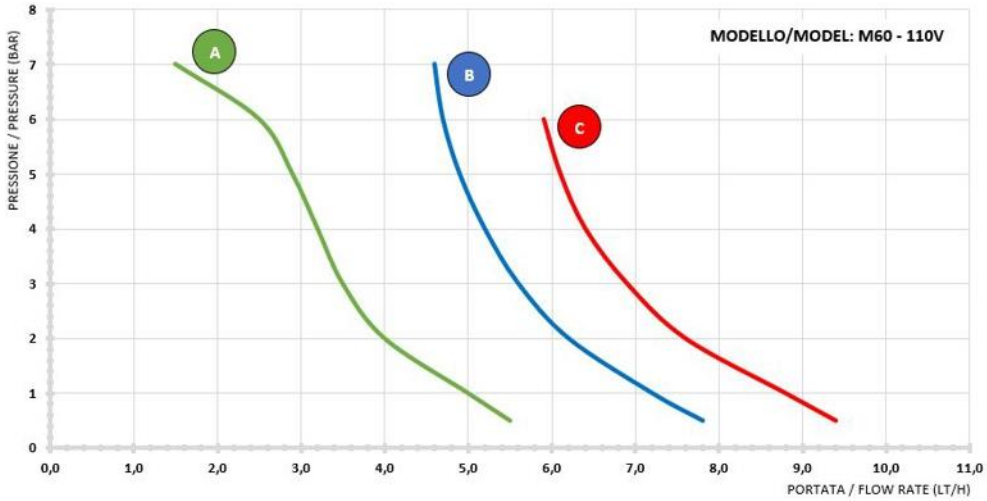

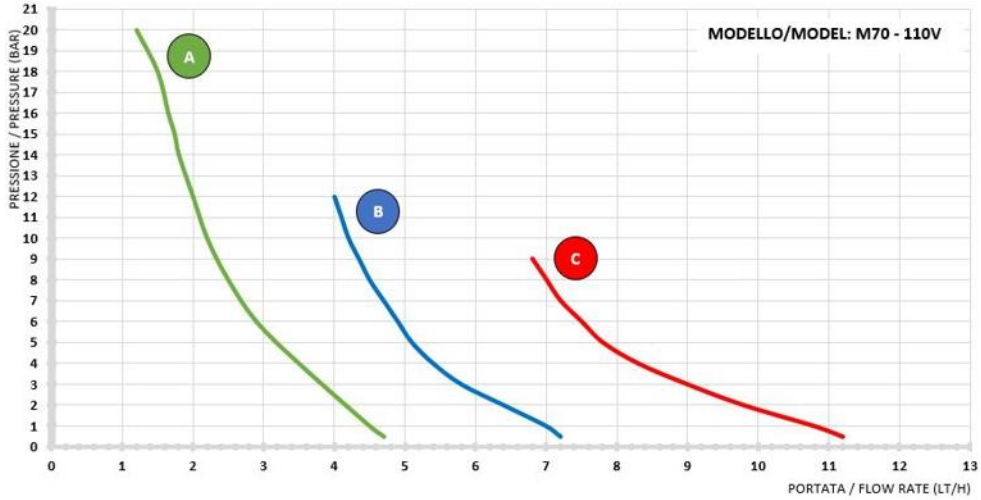

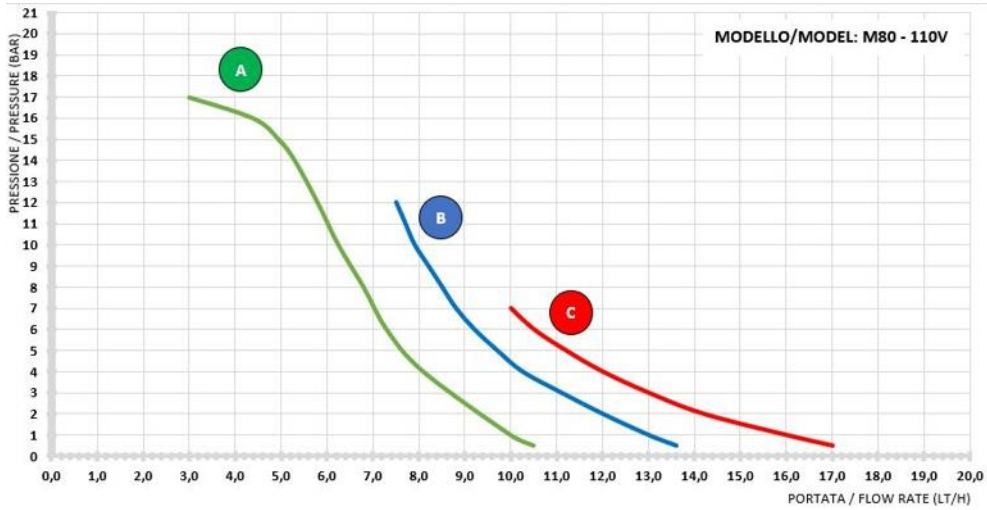

2.5 *CONTENT OF THE PACKAGE*

- *HC151⁺ pump*
- *User's manual*
- *Injection valve PP-GL-VT (PVDF-CE-VT only for PI-mA model)*
- *Foot filter PP-GL-VT (PVDF-CE-VT only for PI-mA model)*
- *2 meters PE discharge tube*
- *2 meters PVC suction tube*

- *2 meters PVC bleed valve tube (2 m)*
- *Fixing bracket*
- *Set of screws and plugs for wall mounting*

3. HC151⁺ CST/HC200⁺ CST

3.1 *HC151⁺ CST/HC200⁺ CST PUMP CONTROLS*

The HC151 + CST pump control panel looks like this:

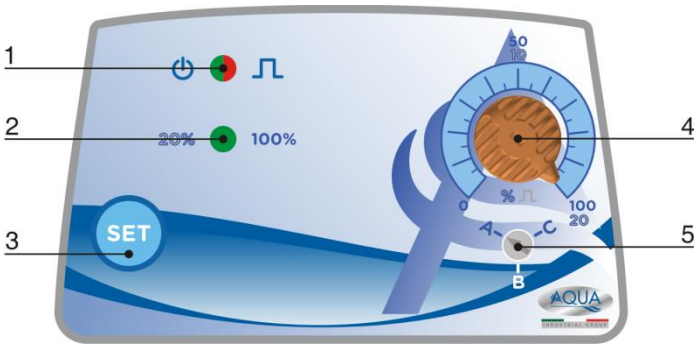

HC151+

1. Green/Red LED Stand-by/Pulse;
2. Green LED stroke frequency scale;
3. Function/Enter button;
4. Strokes frequency hand knob;
5. Pump performances selector;
6.Stroke lenght adjustment knob (only for HC200+).

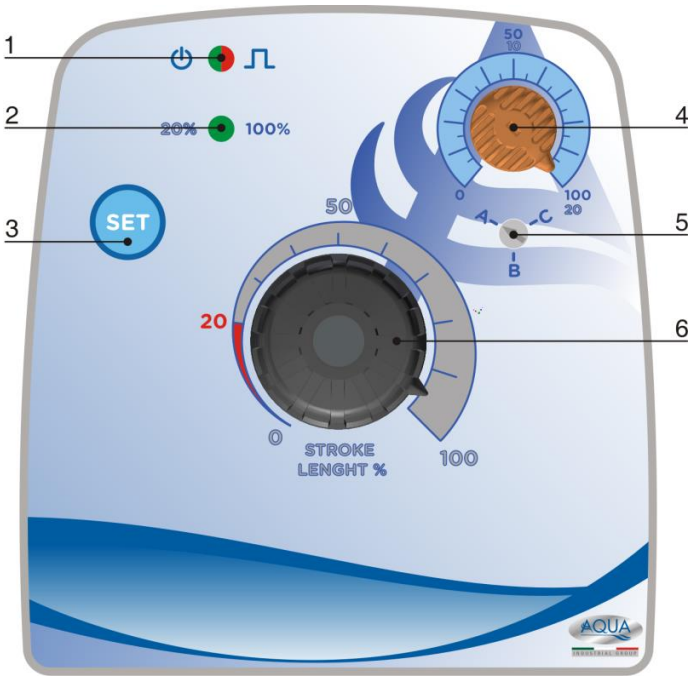

HC200+

3.2 *HC151⁺ CST/HC200⁺ CST OPERATING MODE*

The pump can works in the following mode:

- ***ON-OFF Mode***

- *the pump doses at a constant frequency based on the percentage set using the strokes frequency knob **(4)***
  *When it turns on for the first time the pump is set, by default, in Stand-by (green **LED (1)** steady) with 100% scale frequency (green **LED (2)** steady).*
  *To activate the pump, press and hold the SET **(3)** button for 2 seconds, the pump will start to work (red LED **(1)** flashing) at the frequency set using the hand knob **(4)**; to stop the pump press and hold the SET button for 2 seconds*

*To change the scale frequency from 100% to 20% press **SET (3)** button; ATTENTION: the selection of the frequency scale can be performed only when the pump is in stand-by mode.*

NOTE: after a power failure the pump will return to the state prior to the power failure (Eg: if the pump was operating at the time of the power failure, on its return, the pump will continue working).

3.3 *MODIFICATION OF PUMP PERFORMANCE*

*The HC151+/HC200+ pumps are equipped with a selector **(5)** on the control panel which allows greater flexibility in the choice of the performances obtainable from the pump. The function of the selector is described below:*

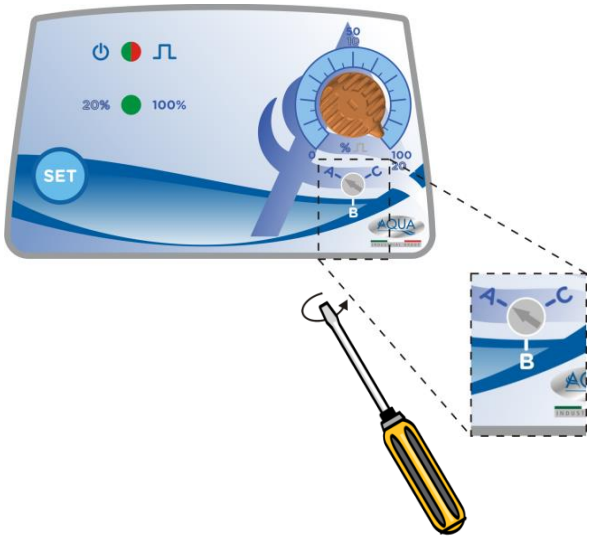

1. *Switch off the dosing pump;*
2. *By means of a flat screwdriver, rotate the selector from its actual position to the destre one (A-B-C), each one corresponding to the datas of "2.3 - HYDRAULIC FEATURES" on pag. 21, depending on pump model chosen (solenoids 60, 70 or 80);*
3. *Switch on the dosing pump.*

Example:

70	A	2	20
		5	1
	B	4	15
		8	1
	C	5	15
		12	1

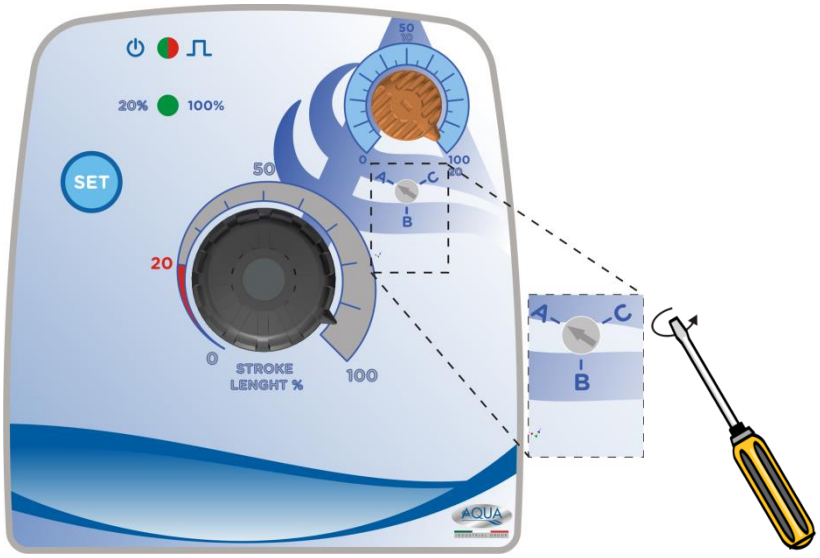

4. HC151+ PImA

4.1 HC151+ PImA PUMP CONTROLS

The HC151+ PImA pump control panel looks like this:

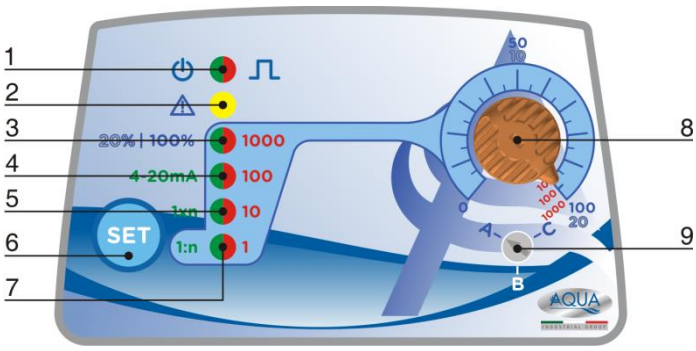

1. Green/Red LED, Stand-by/Pulse;
2. Orange LED, Level alarm;
3. Green/Red LED, frequency scale (green), divider 1:1000 (red);
4. Green/Red LED, 4-20mA signal (green), divider 1:100 (red);
5. Green/Red LED, multiplier (green), divider 1:10 (red);
6. Function/Enter button;
7. Red LED, divider 1:1;
8. Strokes frequency hand knob/multiplier-divider scale 1/10/100/1000;
9. Pump performances selector

4.2 MODIFICATION OF PUMP PERFORMANCE

*The HC151+/ pump is equipped with a selector **(9)** on the control panel which allows greater flexibility in the choice of the performances obtainable from the pump.*
The function of the selector is described below:

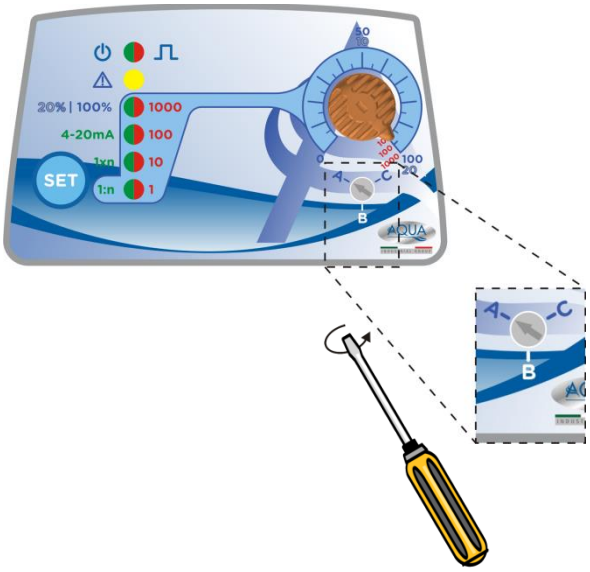

1. Switch off the dosing pump;
2. By means of a flat screwdriver, rotate the selector from its actual position to the destre one (A-B-C), each one corresponding to the datas of "2.3 - HYDRAULIC FEATURES" on pag. 21, depending on pump model chosen (solenoids 60, 70 or 80);
3. Switch on the dosing pump.

Example:

70	A	2	20
		5	1
	B	4	15
		8	1
	C	5	15
		12	1

4.3 *HC151⁺ PImA OPERATING MODE*

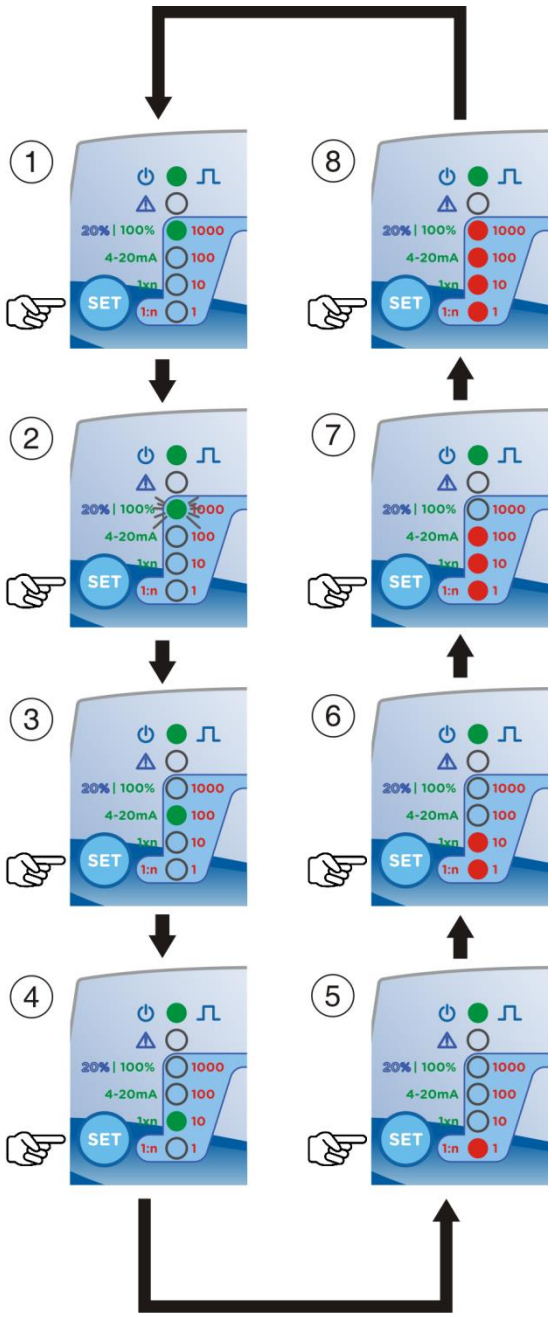

ATTENTION: to confirm that you want to use the selected mode, you must hold down the SET button for 2 seconds. To return to "selection" mode, press and hold the SET button again for 2 seconds.

The pump can operate in one of the following modes, which can be selected by pressing the SET button:

1. *When it turns on for the first time the pump is set, by default, in Stand-by (green **LED (1)** steady) with 100% scale frequency (green **LED (3)** steady), press **SET** button to move to the next function;*
2. *Green LED flashing **(3)**,**20% scale frequency**, this means the function it has been selected. It is now possible to obtain a more precise adjustment of the percentage of strokes using the hand knob **(8)** is used, press the SET button to move to the next function;*
3. *Green LED **(4)** steady, **4-20mA proportional functioning**: the mA current supplied to the pump (via an input signal) will determine the proportional dosage. By means the hand knob **(8)** it is possible to set the max frequency of the pump (in percentage) associated to the maximum mA current value (which it is 20 mA) (ex.: hand knob **(8)** set on 50%, at 20mA the pump will works at 50% of the maximum frequency);*
4. *Green LED **(5)** steady, **pulse emitting water meter proportional functioning – 1XN multiplier mode:** pulses supplied by water meter, are multiplied by the value set with the hand knob **(8)** (from 10 to 100);*
5. *Red LED **(7)** steady, **pulse emitting water meter proportional functioning – 1:N divider mode – (divider mode 1÷1):** a pulse provided by the water meter generates a strokes from the pump.*
6. *Red LED **(5)** steady, **pulse emitting water meter proportional functioning – 1:N divider mode – (divider mode 1÷10):** pulses provided by a water meter, are divided (from 1 to 10) by means the hand knob **(8)**.*
7. *Red LED **(4)** steady, **pulse emitting water meter proportional functioning – 1:N divider mode – (divider mode 10÷100):** pulses provided by a water meter, are divided (from 10 to 100) by means the hand knob **(8)**.*
8. *Red LED **(3)** steady, **pulse emitting water meter proportional functioning – 1:N divider mode – (divider mode 100÷1000):** pulses provided by a water meter, are divided (from 100 to 1000) by means the hand knob **(8)**.*

Note: It is advisable to use the "multiplier" mode in the presence of water meters that provide few pulses and it is necessary to multiply them to allow the pump to dose correctly.
It is advisable to use the "divider" mode in the presence of water meters that provide many pulses and it is necessary to divide them to allow the pump to dose correctly.

4.5 *HOW TO CHOOSE THE PERFORMANCES OF A PUMP*

Being known the value of m^3 (cubic meters) of water of the plant to be treated and the quantity of chemical to be dosed, expressed in ppm (gr / m^3), it is possible to define the minimum flow rate (l / h) of the metering pump required, using the following formula:

$$l/h = \frac{ppm \times K \times m^3}{1000}$$

Where:

- *ppm = quantity of chemical to be dosed, expressed in ppm (gr / m^3)*
- *K = dilution coefficient of the chemical to be dosed. Pure chemical K=1 (Example: Sodium Hypochlorite at 12%; K = 100:12 = 8,3)*
- *m^3 = maximum flow rate of the water to be treated expressed in m^3*

4.6 *HOW TO CALCULATE THE MULTIPLICATION VALUE (1xN)*

$$N = \frac{ppm \times K}{imp/l \times cc \times 1000}$$

Where:

- *ppm = quantity of chemical to be dosed, expressed in ppm (gr / m^3)*
- *K = dilution coefficient of the chemical to be dosed. Pure chemical K=1 (Example: Sodium Hypochlorite at 12%; K = 100:12 = 8,3)*
- *pulses/l = pulses per liter supplied by the pulse emitting water meter*
- *cc = quantity of chemical dosed per single injection from the dosing pump*

4.7 *HOW TO CALCULATE THE DIVISION VALUE (1:N)*

$$N = \frac{imp/l \times cc}{ppm \times K} \times 1000$$

Dove:

- *ppm = of chemical to be dosed, expressed in ppm (gr / m^3)*
- *K = dilution coefficient of the chemical to be dosed. Pure chemical K=1 (Example: Sodium Hypochlorite at 12%; K = 100:12 = 8,3)*
- *pulses/l = pulses per liter supplied by the pulse emitting water meter*
- *cc = quantity of chemical dosed per single injection from the dosing pump*

If in the calculation of the parameter "N", it results:

- *N <1 (N less than 1) it is necessary to install a water meter with a higher number of pulses per liter or a dosing pump with a higher flow rate per injection.*
- *N>1000 (N more than 1000) it is necessary to install a dosing pump with a lower flow rate per injection.*

5. DOSING PUMPS INSTALLATION RULES

Strictly follow the instructions for a correct installation of the dosing pump to avoid malfunctions. The most frequent cases are described below:

• Locate the pump as shown in Figure 1, bearing in mind that it can be mounted either below or above the level of the chemical to be dosed within the maximum limit of 2 meters (we suggest 1.5 meters). The injection point must always be placed higher than the chemical to be injected.

• If the system to be treated works at atmospheric pressure and the chemical tank must absolutely be positioned higher than the injection point (Figure 2), periodically check the functionality of the injection valve (I), as its excessive wear could lead to unintentional injection of the chemical into the plant due to gravity (even with the dosing pump stopped). If the problem persists, insert a counter-pressure valve (V) correctly calibrated between the dosing pump and the injection point.

• For chemicals that emit aggressive fumes, do not install the pump on top of the tank unless the tank is hermetically sealed (Figure 3).

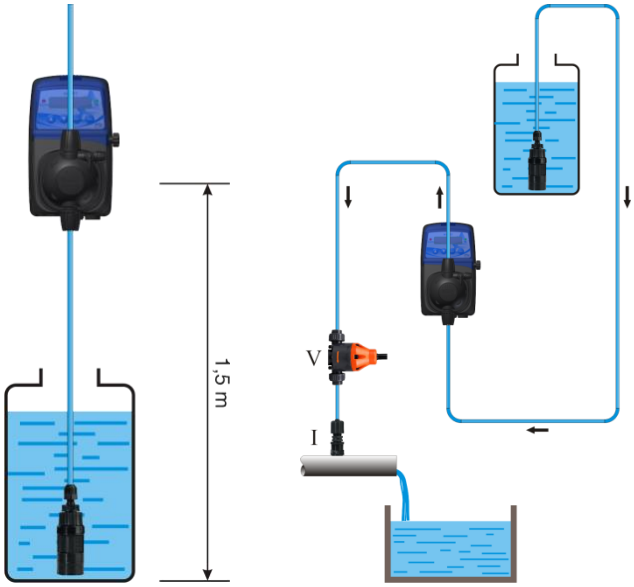

Figure 1

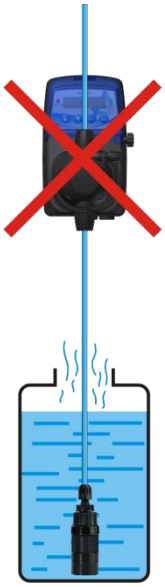

Figure 2

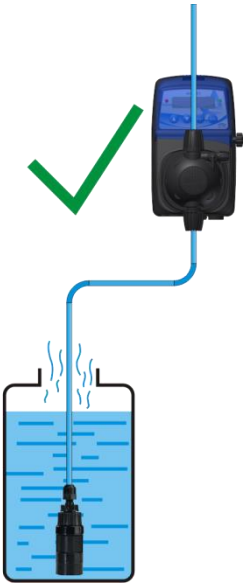

Figure 3

6. ELECTRICAL CONNECTIONS

6.1 HC151+ PImA model pump

The connector on the bottom of the pump allows the connection of an external signal coming from a pulse emitting water meter or a mA signal. Obviously, if a pulse emitting water meter is connected, a mA signal cannot be connected and vice versa. The pump is also equipped with a BNC connector for connecting a level probe (not included in the package).

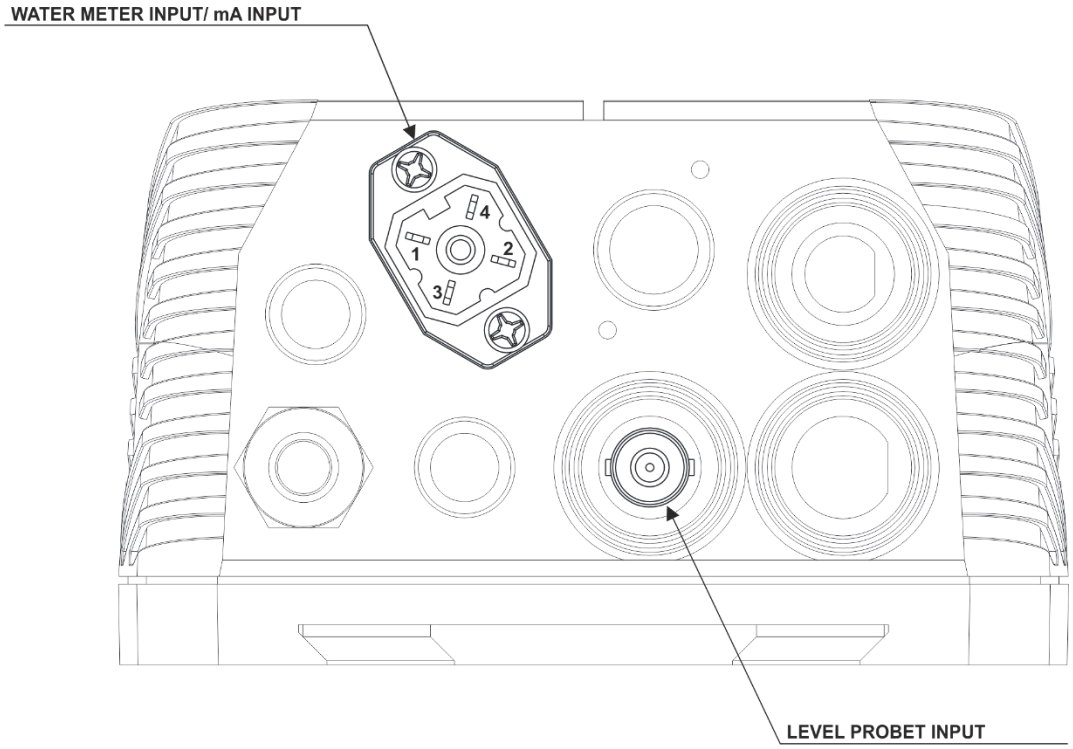

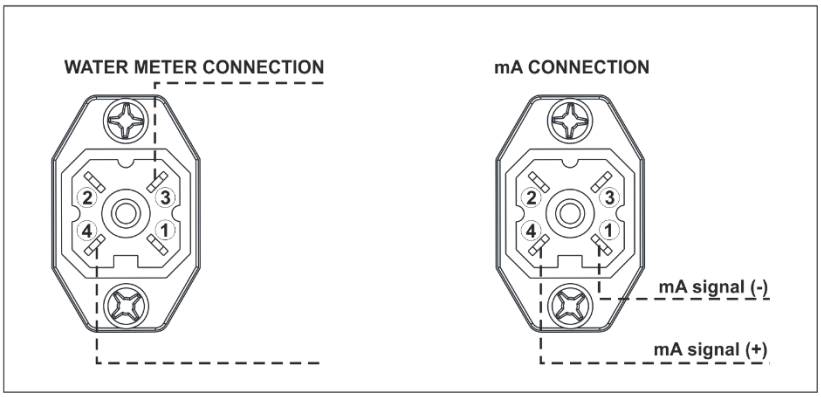

7. TROUBLESHOOTING

The solenoid driven dosing pump is a relatively robust device, therefore the chances of mechanical failures are low. Sometimes chemical leaks may occur from nipples or loose hose nuts of the pump head or simply due to breakage of the discharge pipe. If one of the above cases occurs, user has to first disconnect the unit from the power supply, then replaces the damaged part, cleans the unit from any chemical leaks, then restart the pump.

7.1 PROBLEM – CAUSE – SOLUTION

Below are listed some of the problems that may occur, the causes and solutions

PROBLEM	POSSIBLE CAUSE	SOLUTION
The pump does not switch on	The pump is not powered The protection fuse is blown up. The electronic board is damaged	Connect the pump to the mains. Replace the fuse. Replace the electronic board.
The pump does not dose but the solenoid is working	The foot filter is obstructed. The suction tube is empty, the pump is not primed. Air bubbles in the hydraulic circuit. The chemical in use generates gas	Clean the foot filter. Repeat the priming procedure. Check nipples and hoses Open the bleed valve and let the air goes out. Replace the pump head with automatic bleed version.
The pump does not dose and the solenoid does not works or the stroke is greatly muffled.	Crystals formation, valve occlusion and / or the balls are blocked. The injection valve is obstructed	Clean the valves and try to circulate water instead of the chemical product. Replace the valves of the pump head. Replace the injection valve.

8. CLEANING AND MAINTENANCE

8.1 CLEANING THE PUMP

The pump must be periodically cleaned in order to ensure its efficiency. We suggest to carry out regular cleaning during maintenance period.
Before carrying out any maintenance or cleaning operations on the dosing pump, it is necessary to:
1. Make sure that it is electrically disabled (both polarities) by disconnecting the conductors from the contact points of the power supply by opening the omnipolar switch;
2. Eliminate in the most appropriate and gradual way, (paying the utmost attention not to generate splashes), the existing pressure in the pump body and in the delivery pipe, by opening the appropriate air bleed valve.
3. Remove the protective cover of the pump body, to highlight any underlying leaks and encrustations;
4. Clean any incrustations due to leaks or drips on the pump body or on the entire pump structure, paying particular attention to the lower part of the pump where, usually, any incrustations due to drips accumulate;
5. Reassemble the cover of the pump body, the delivery and suction pipes, close the air bleed valve and reconnect the pump electrically;
6. Carry out priming if necessary and restore the normal operating status of the pump.

8.2 PUMP MAINTENANCE

Under normal operating conditions, the metering pump should be checked monthly.
To avoid malfunctions or sudden stops, carefully check the following items:
- check that the electrical and hydraulic connections are intact;
- check for any leaks on the connections of the pump head or the injection valve;
- check that there are no parts of the pump or pipes corroded.

Always empty the pump head from chemical, if there could still be presence of dangerous chimica inside the pump head it is mandatory to declare it filling the RETURN MATERIAL AUTHORIZATION module.
Always use original spare parts if it is necessary to replace worn parts

All technical assistance operations must be performed only by expert and authorized personnel. If the pump requires direct assistance from the manufacturer, it is necessary to remove all the liquid inside the pump head and dry it BEFORE packing it in its original box!

9. WARRANTY

The product is covered by the manufacturer's warranty for manufacturing defects. The methods and conditions are set forth in the "General Conditions of Sale" document of AQUA SpA.

EXPLODED VIEWS

HC151+

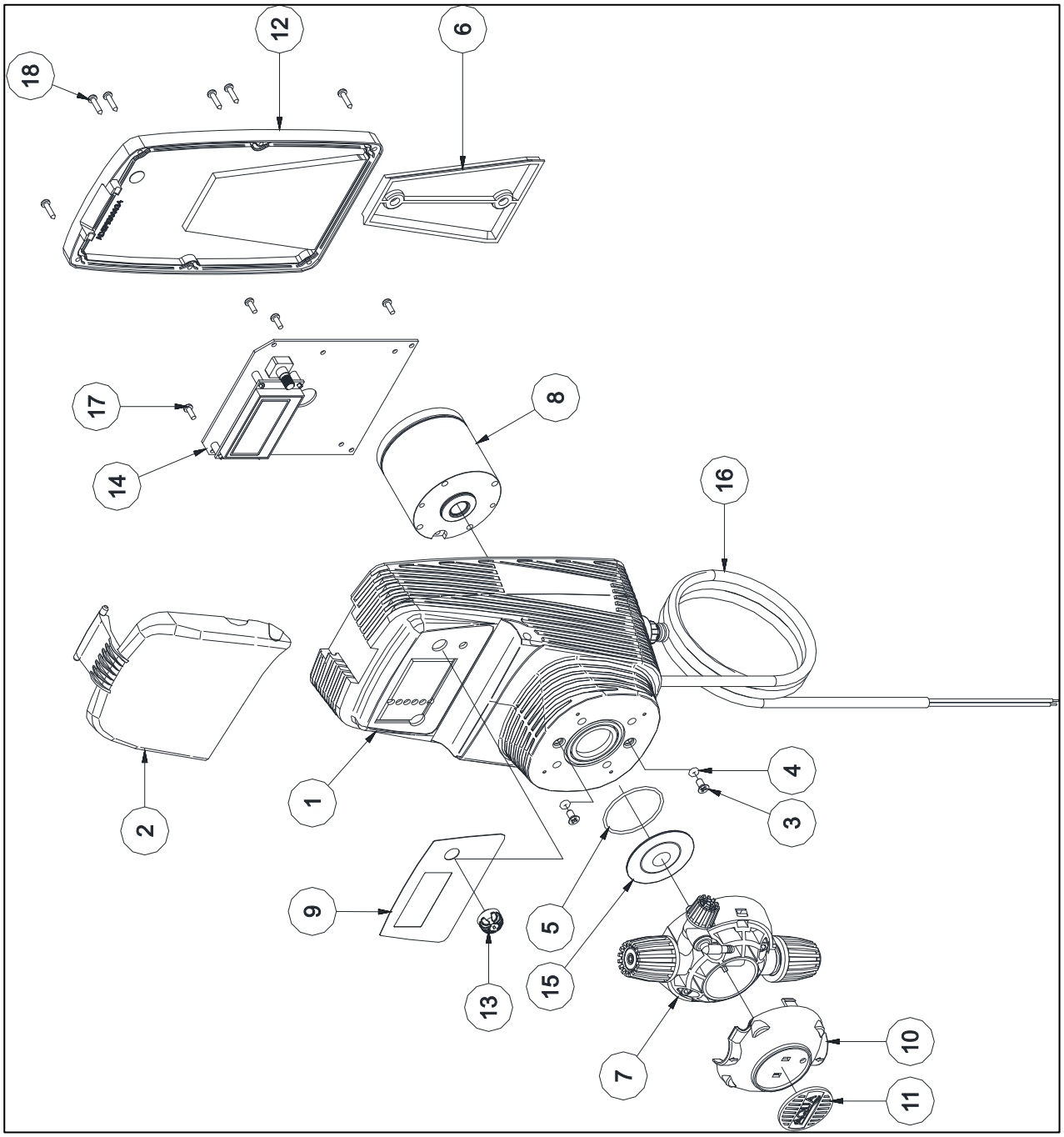

N°	Codice *Code*	Descrizione *Description*	Quantità *Quantities*
1	ADSP9300058	CASSA HC151+ PP+20% FV NERA *HC 151+ PP+20% GF BLACK HOUSING*	1
2	ADSP9300061	VETRINO TRASPARENTE HC151+ *HC151+ TRANSPARENT FRONT COVER*	1
3	ADSP6000708	VITE M4X8 UNI 7688 (AF-TSTC) INOX A2 *M4X8 UNI 7688 (AF-TSTC) SS A2 SCREW*	2
4	ADSP5007072	OR “R1” NBR – 2,60X1,90 *NBR – 2,60X1,90 O-RING*	2
5	ADSP5007117	OR – RIF. 2150 – FPM *FPM 2150 ORING*	1
6	ADSP6020221	STAFFA FISSAGGIO A PARETE *WALL FIXING BRACKET*	1
7	ADSP9000I00	CORPO POMPA 1-14 PP-GL-VT INCOMPLETO HC897 *1-14 PP-GL-VT INCOMPLETE PUMP HEAD*	1
7	ADSP900PI00	CORPO POMPA 1-14 PVDF-PTFE-VT INCOMPLETO HC897 *1-14 PVDF-PTFE-VT INCOMPLETE PUMP HEAD*	1
8	ADSP6000295	MAGNETE COMPLETO D60 VERS.2 230V SILENZIOSO *230V D60 COMPLETE SOLENOID*	1
8	ADSP6000287	MAGNETE COMPLETO D70 230V – CORSA CORTA - SILENZIOSO *230V D70 COMPLETE SOLENOID*	1
8	ADSP6000536	MAGNETE COMPLETO D80 4l/20bar 230V – (MOD.8) - SILENZIOSO *230V D80 COMPLETE SOLENOID*	1
9	ADSP7000760	ETICHETTA POLICARBONATO HC151+ CST S/LIVELLO *HC151+ CST POLICARBONATE ADHESIVE LABEL*	1
9	ADSP7000770	ETICHETTA POLICARBONATO HC151+ PI-MA *HC151+ PIMA POLICARBONATE ADHESIVE LABEL*	1
10	ADSP9000022	COVER NERO CORPO POMPA 1-14LT HC897 *1-14LT PUMP HEAD BLACK COVER*	1
11	ADSP9000003	TARGHETTA NERA CON LOGO AQUA PER CORPO POMPA 1-14LT *1-14LT PUMP HEAD BLACK PLATE WITH LOGO AQUA*	1
12	ADSP9300034L	COPERCHIO POSTERIORE HC151 DGT PP NERO CON GUARNIZ. *HC151 DGT PP BACK COVER WITH GASKET*	1
13	ADSP9300071	MANOPOLA POTENZIOMETRO HC151+ *HC151+ KNOB FOR POTENTIOMETER*	1
14	ADSP9300081	SKD HC151+ CST 100÷240Vac S/LIVELLO *HC151+ CST 100÷240Vac ELECTRONIC BOARD*	1
14	ADSP9300082	SKD HC151+ PI-MA 100÷240Vac *HC151+ PIMA 10÷240Vac ELECTRONIC BOARD*	1
15	ADSP9200001	DIAFRAMMA PTFE DYNEON 1614/1645 1-14L HC897 M12x1 *1614/1645 1-14L HC897 M12x1 PTFE DYNEON DIAPHRAGM*	1
16	ADSP6020281	CAVO H05VV-F 3x0,75 METRI 3 + PRESSACAVO PG7 E FASTON FEMMINA 2,8x0,8 *H05VV-F 3x0,75 POWER SUPPLY CABLE 3 METERS W/OUT PLUG*	1
17	ADSP6000749	VITE 3x8 (TCTC) INOX A2 – SERIE HILO *3x8 SS A2 HILO SERIES SCREW*	4
18	ADSP6000714	VITE 2,9x13 UNI 6954 (TCTC) *2,9x13 UNI6954 SCREW*	6

HC200+

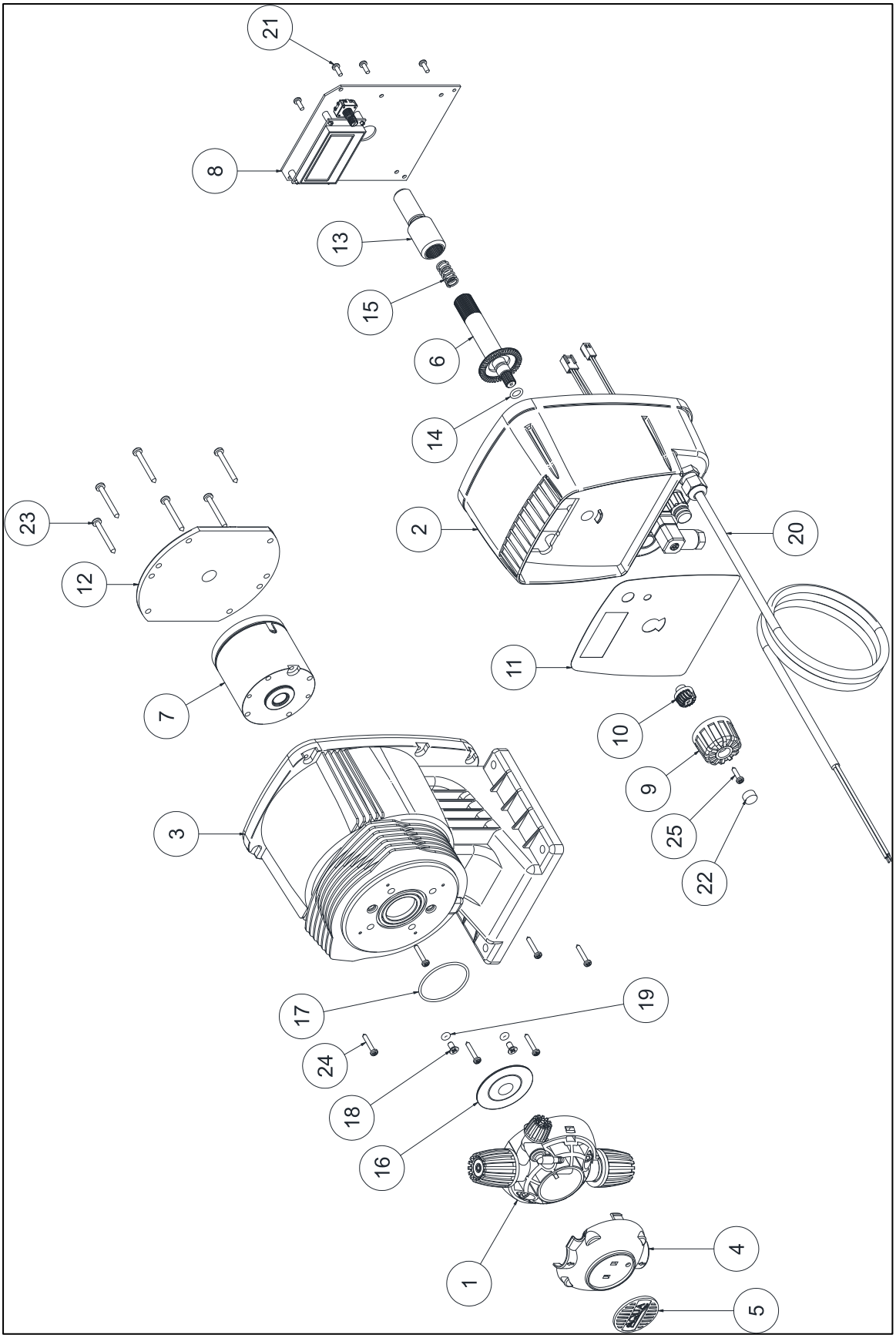

N°	Codice *Code*	Descrizione *Description*	Quantità *Quantities*
1	ADSP9000I00	CORPO POMPA 1-14 PP-GL-VT INCOMPLETO HC897 *1-14 PP-GL-VT INCOMPLETE PUMP HEAD*	1
1	ADSP900PI00	CORPO POMPA 1-14 PVDF-PTFE-VT INCOMPLETO HC897 *1-14 PVDF-PTFE-VT INCOMPLETE PUMP HEAD*	1
2	ADSP9300063	CASSA ANTERIORE HC200+ NERA *HC200+ FRONT CASING BLACK COLOR*	1
3	ADSP9300059	CASSA POSTERIORE HC200+ NERA *HC200+ REAR CASING BLACK COLOR*	1
4	ADSP9000022	COVER NERO CORPO POMPA 1-14LT HC897 *1-14LT PUMP HEAD BLACK COVER*	1
5	ADSP9000003	TARGHETTA NERA CON LOGO AQUA PER CORPO POMPA 1-14LT *1-14LT PUMP HEAD BLACK PLATE WITH LOGO AQUA*	1
6	ADSP6000759	PERNO REGOLAZIONE CORSA LAVORATO *STROKE LENGTH SHAFT*	1
7	ADSP6000295	MAGNETE COMPLETO D60 VERS.2 230V SILENZIOSO *230V D60 COMPLETE SOLENOID*	1
7	ADSP6000287	MAGNETE COMPLETO D70 230V – CORSA CORTA - SILENZIOSO *230V D70 COMPLETE SOLENOID*	1
8	ADSP9300081	SKD HC151+ CST 100÷240Vac S/LIVELLO *HC151+ CST 100÷240Vac ELECTRONIC BOARD*	1
9	ADSP6000507	MANOPOLA REGOLAZIONE CORSA AQUA *STROKE LENGHT ADJUSTMENT KNOB*	1
10	ADSP9300071	MANOPOLA POTENZIOMETRO HC151+ *HC151+ KNOB FOR POTENTIOMETER*	1
11	ADSP7000773	ETICHETTA POLICARBONATO HC200+ CST S/LIVELLO *HC200+ CST POLICARBONATE ADHESIVE LABEL*	1
12	ADSP6000738	INSERTO REGOLAZIONE CORSA 04-18 CON PIASTRA *04-18 STROKE LENGTH ADJUSTMENT INSERT WITH PLATE*	1
13	ADSP6000739	VITE REGOLAZIONE CORSA 04-18 *04-18 STROKE LENGTH ADJUSTMENT SCREW*	1
14	ADSP5007035	OR – RIF. 106 – FPM *FPM 106 O-RING*	1
15	ADSP5003021	MOLLA RITORNO REGOLAZIONE CORSA HC101 *HC101 RETURN SPRING STROKE LENGHT ADJUSTMENT*	1
16	ADSP9200001	DIAFRAMMA PTFE DYNEON 1614/1645 1-14L HC897 M12x1 *1614/1645 1-14L HC897 M12x1 PTFE DYNEON DIAPHRAGM*	1
17	ADSP5007117	OR – RIF. 2150 – FPM *FPM 2150 ORING*	1
18	ADSP6000708	VITE M4X8 UNI 7688 (AF-TSTC) INOX A2 *M4X8 UNI 7688 (AF-TSTC) SS A2 SCREW*	2
19	ADSP5007072	OR “R1” NBR – 2,60X1,90 *NBR – 2,60X1,90 O-RING*	2
20	ADSP6020281	CAVO H05VV-F 3x0,75 METRI 3 + PRESSACAVO PG7 E FASTON FEMMINA 2,8x0,8 *H05VV-F 3x0,75 POWER SUPPLY CABLE 3 METERS W/OUT PLUG*	1
21	ADSP6000749	VITE 3x8 (TCTC) INOX A2 – SERIE HILO *3x8 SS A2 HILO SERIES SCREW*	4
22	ADSP6000542	TAPPO IN PVC NERO PER VITE M4 *PVC CAP FOR M4 SCREW*	1
23	MB010300	VITE 3,5 X 32 UNI 6954 (AF-TCTC) INOX A2 *3,5 X 32 STAINLESS STEEL SCREW*	6
24	ADSP6000800	VITE 2,9 X 19 UNI 6954 (AF-TCTC) INOX A2 *2,9 X 19 STAINLESS STEEL SCREW*	6
25	ADSP6000714	VITE 2,9 X 13 UNI 6954 (AF-TCTC) INOX A2 *2,9 X 13 STAINLESS STEEL SCREW*	1

PUMP HEAD

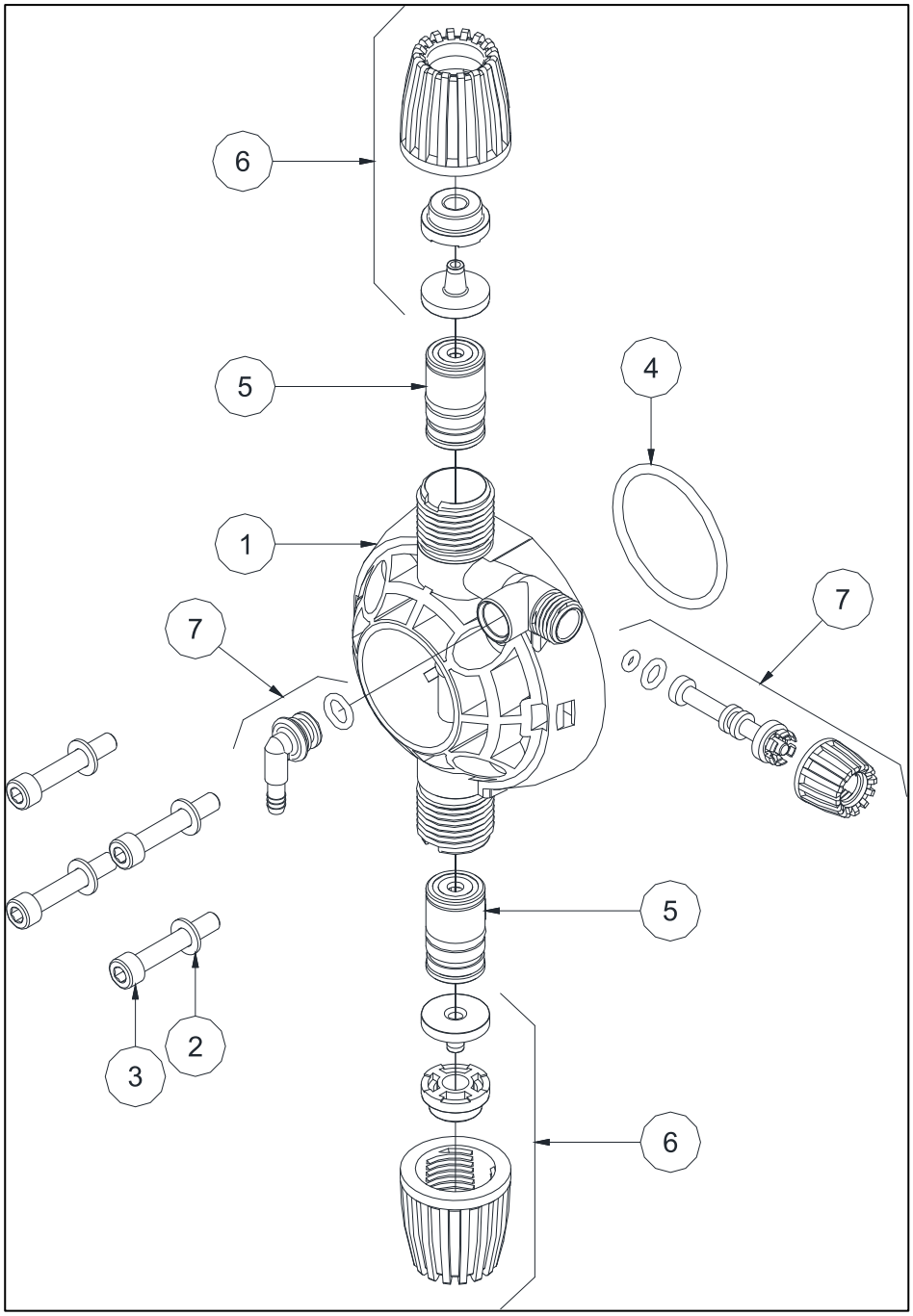

CORPO POMPA PP / PP PUMP HEAD

CORPO POMPA PVDF / PVDF PUMP HEAD

N°	Codice *Code*	Descrizione *Description*	Quantità *Quantities*
1	ADSP9000001	CORPO POMPA 1-14 PP NERO HC897M (VN) *1-14 PP BLACK PUMP HEAD*	1
1	ADSP9000001P	CORPO POMPA 1-14 PVDF BIANCO HC897 *1-14 PVDF WHITE PUMP HEAD*	1
2	ADSP6000701	RONDELLA PIANA D. 5 – UNI 6592 INOX A2 *D.5 WASHER – UNI 6592 SS A2*	4
3	ADSP9000016	VITE M5x30 UNI 5931 (TCEI) INOX A2 *M5x30 UNI 5931 SS A2 SCREW*	4
4	ADSP5007200	OR – RIF. 3143 (T.2,62xD.36,14) – FPM NERO *FPM 3143* (T.2,62xD.36,14) *ORING*	1
4	ADSP5007209	OR – RIF. 3143 (T.2,62xD.36,14) – EPDM NERO *EPDM 3143* (T.2,62xD.36,14) *ORING*	1
5	ADSP9005010	KIT GRUPPO VALVOLA ½” PP-GL-VT *½” PP-GL-VT VALVE KIT*	1
5	ADSP9005011	KIT GRUPPO VALVOLA ½” PP-GL-DT *½” PP-GL-DT VALVE KIT*	1
5	ADSP9005P12	KIT GRUPPO VALVOLA ½” PVDF-CE-VT *½” PVDF-CE-VT VALVE KIT*	1
5	ADSP9005P13	KIT GRUPPO VALVOLA ½” PVDF-CE-DT *½” PVDF-CE-DT VALVE KIT*	1
6	ADSP6500059	KIT FISSAGGIO PP ½” PER TUBO 4x6 *½” PP FIXING KIT FOR 4x6 HOSE*	1
6	ADSP6500060	KIT FISSAGGIO PVDF ½” PER TUBO 4x6 *½” PVDF FIXING KIT FOR 4x6 HOSE*	1
6	ADSP6500067	KIT ATTACCO TUBO 6x8 CON GHIERA DA ½” PP NERA *6x8 FIXING KIT WITH ½” BLACK PP HOSE NUT*	2
6	ADSP6500068	KIT ATTACCO TUBO 6x9 CON GHIERA DA ½” PP NERA *6x8 FIXING KIT WITH ½” BLACK PP HOSE NUT L*	2
6	ADSP6500063	KIT ATTACCO TUBO 6x10 CON GHIERA DA ½” PP NERA *6x8 FIXING KIT WITH ½” BLACK PP HOSE NUT*	2
7	ADSP6500072	KIT VITE SPURGO + PORTAGOMMA PP-VT CORPO POMPA *AIR BLEED KIT + PP-VT HOSE FITTING FOR PUMP HEAD*	1
7	ADSP6500072P	KIT VITE SPURGO + PORTAGOMMA PVDF-VT CORPO POMPA *AIR BLEED KIT + PP-VT HOSE FITTING FOR PUMP HEAD*	1
7	ADSP6500073	KIT VITE SPURGO + PORTAGOMMA PP-DT CORPO POMPA *AIR BLEED KIT + PP-DT HOSE FITTING FOR PUMP HEAD*	1
7	ADSP650073P	KIT VITE SPURGO + PORTAGOMMA PVDF-DT CORPO POMPA *AIR BLEED KIT + PVDF-DT HOSE FITTING FOR PUMP HEAD*	1

AUTO BLEED PUMP HEAD

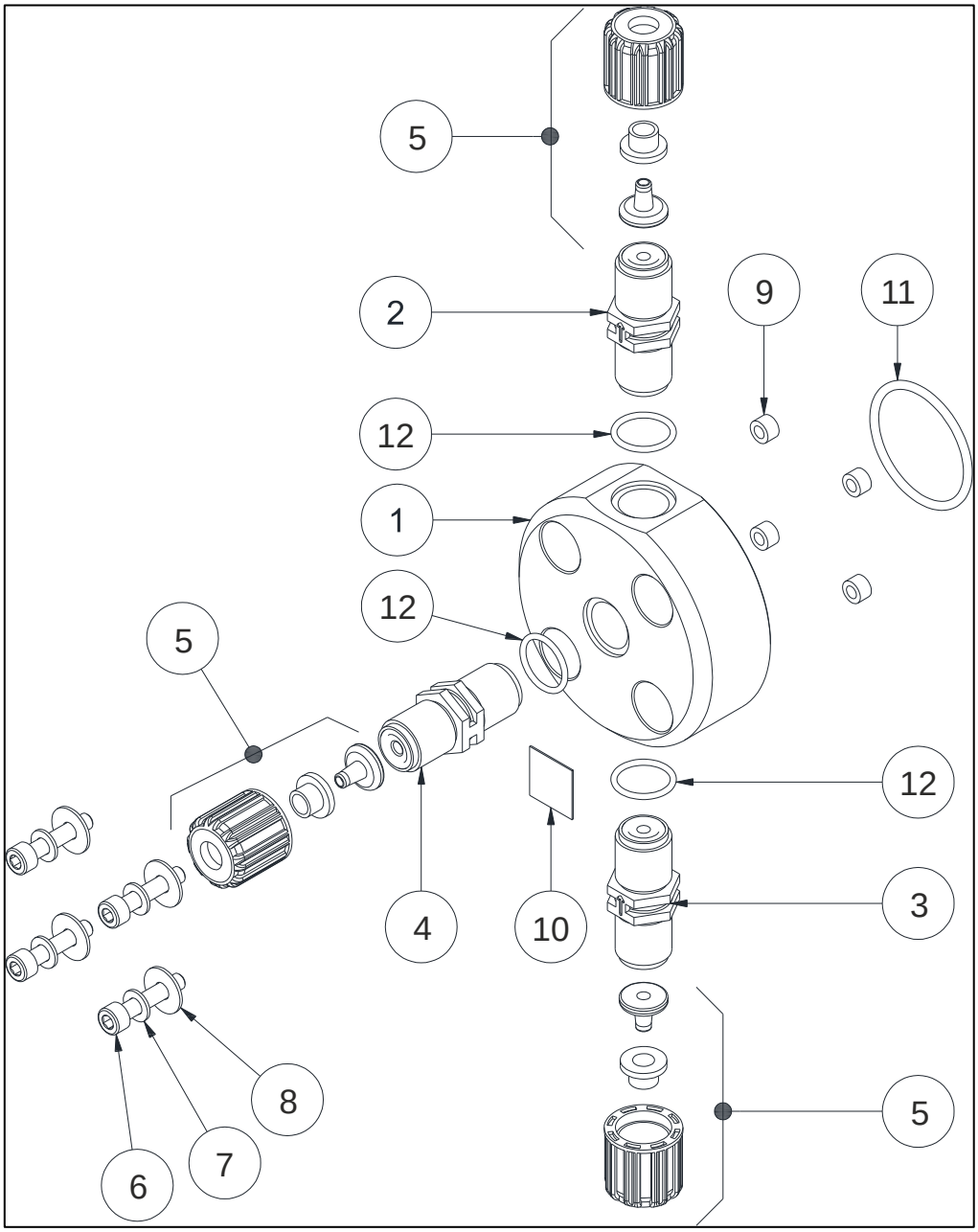

N°	Codice *Code*	Descrizione *Description*	Quantità *Quantities*
1	ADSP9000029	CORPO POMPA 1-14 PVC SPURGO AUTOMATICO *1-14 PVC AUTO BLEED PUMP HEAD*	1
2	ADSP5005033	GRUPPO VALVOLA 3/8" PER SPURGO PP-CE-VT *3/8" PP-CE-VT DEGAS VALVE KIT*	1
2	ADSP5005133	GRUPPO VALVOLA 3/8" PER SPURGO PP-CE-DT (OR2015 PTFE) *3/8" PP-CE-DT DEGAS VALVE KIT*	1
2	ADSP5005036	GRUPPO VALVOLA 3/8" PER SPURGO PVDF-CE-VT *3/8" PVDF-CE-VT DEGAS VALVE KIT*	1
2	ADSP5005038	GRUPPO VALVOLA 3/8" PER SPURGO PVDF-CE-DT *3/8" PVDF-CE-DT DEGAS VALVE KIT*	1
3	ADSP5005031	GRUPPO VALVOLA 3/8" PP-CE-VT *3/8" PP-CE-VT VALVE KIT*	1
3	ADSP5005131	GRUPPO VALVOLA 3/8" PP-CE-DT *3/8" PP-CE-DT VALVE KIT*	1
3	ADSP5005034	GRUPPO VALVOLA 3/8" PVDF-CE-VT *3/8" PVDF-CE-VT VALVE KIT*	1
3	ADSP5005037	GRUPPO VALVOLA 3/8" PVDF-CE-DT *3/8" PVDF-CE-DT VALVE KIT*	1
4	ADSP5005032	GRUPPO VALVOLA 3/8" PP-CE-HAST-VT *3/8" PP-CE-HAST-VT VALVE KIT*	1
4	ADSP5005132	GRUPPO VALVOLA 3/8" PP-CE-HAST-DT *3/8" PP-CE-HAST-DT VALVE KIT*	1
4	ADSP5005035	GRUPPO VALVOLA 3/8" PVDF-CE-HAST-VT *3/8" PVDF-CE-HAST-VT VALVE KIT*	1
4	ADSP5005135	GRUPPO VALVOLA 3/8" PVDF-CE-HAST-DT *3/8" PVDF-CE-HAST-DT VALVE KIT*	1
5	ADSP6500048	KIT FISSAGGIO PP 3/8" PER TUBO 4X6 *3/8" PP FIXING KIT FOR 4X6 HOSE*	3
5	ADSP6500013	KIT FISSAGGIO PVDF 3/8" PER TUBO 4X6 *3/8" PVDF FIXING KIT FOR 4X6 HOSE*	3
6	MB010040	VITE M5x25 UNI 5931 (TCEI) INOX A2 *M5x25 UNI 5931 SS A2 SCREW*	4
7	ADSP6000701	RONDELLA PIANA D. 5 – UNI 6592 INOX A2 *D. 5 WASHER – UNI 6592 SS A2*	4
8	MB010460	RONDELLA PIANA 5x15 – UNI 6592 INOX A2 *5x15 WASHER – UNI 6592 SS A2*	4
9	ADSP5007011	BUSSOLA PER CORPO POMPA D. 3,2 x 6,45 x 5,5 SANT64A *PUMP HEAD SCREW GASKET* D. 3,2 x 6,45 x 5,5 SANT64A	4
10	ADSP7000442	ETICHETTA FLOW PER COLLARE PORTASONDA DN50-63 *FLOW DIRECTION LABEL*	1
11	ADSP5007200	OR – RIF. 3143 (T.2,62 x D.36,14) FPM NERO *FPM 3143* (T.2,62 x D.36,14) ORING	1
11	ADSP5007209	OR – RIF. 3143 (T.2,62 x D.36,14) EPDM NERO *EPDM 3143* (T.2,62 x D.36,14) ORING	1
12	ADSP5007001	OR – RIF. 2062 – FPM NERO *FPM 2062 - ORING*	3
12	ADSP5007002	OR – RIF. 2062 – EPDM NERO *EPDM 2062 - ORING*	3

USE AND MAINTENANCE INSTRUCTIONS MANUAL FOR DOSING PUMP

HC151+/HC200+ CST / HC151+ PImA